Agriculture • Horticulture • Forestry • Environment • Amenity

LANDWARDS

Autumn 2002

WATER MEADOWS

- BIOGAS PLANT
- POSTHARVEST TECHNOLOGY

www.iagre.org
Volume 57 No.5
IAgrE JOURNAL

smooth operators

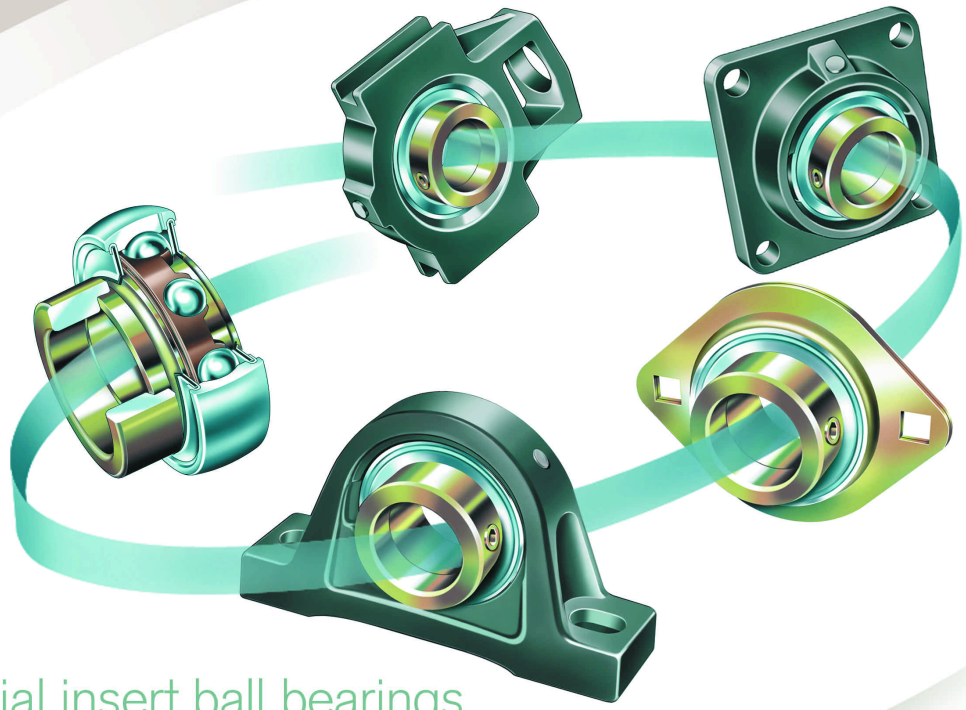

radial insert ball bearings and housed units by INA

Whatever the application, housed bearings by INA ensure smooth, trouble free operation.

Backed by the international design and production capabilities of INA, the standard range includes plummer block, flanged and take-up housings with radial insert ball bearings.

Quick and easy to fit, they are all designed to compensate shaft misalignment errors.

Produced from a variety of base materials including unsplit cast iron, Corrotect® coated cast iron, reinforced plastic and sheet steel, INA housed bearings provide unmatched performance - even in the most unfriendly environments.

Creative Technology

INA BEARING COMPANY LTD
FORGE LANE, MINWORTH, SUTTON COLDFIELD, WEST MIDLANDS B76 1AP.
TELEPHONE: 0121 351 3833 FAX: 0121 351 7686
E-MAIL: ina.bearing@uk.ina.com WEB: www.ina.com

Volume 57 No 5, **2002**

LANDWARDS

The Journal for Professional Engineers in Agriculture, Horticulture, Forestry, Environment and Amenity

Editor
Eur Ing Prof Brian D Witney
PhD CEng FIMechE HonFIAgrE MemASAE FFCS
LAND TECHNOLOGY LTD
33 South Barnton Ave,
Edinburgh,EH4 6AN
Tel/Fax:0131 336 3129
E-mail:landwards@landtec.co.uk
Website:http://www.landtec.co.uk

Advertising
All enquiries to the Institution of Agricultural Engineers
Tel:01525 861096
Fax:01525 861660

Origination: David King

Printing: Barr Printers Ltd

Publisher
Landwards is published bimonthly by:
Institution of Agricultural Engineers,
West End Road,Silsoe,
Bedford,MK45 4DU
Tel:01525 861096
Fax:01525 861660
E-mail:secretary@iagre.org
Website:http://www.iagre.org

President
Dr Dan Mitchell
CEng FIAgrE FRAgS

Chief Executive & Secretary
Christopher R Whetnall
IEng MIAgrE MemASAE

CONTENTS

Feature Articles

Front cover: *John Deere 3800 pivot steer telescopic handler (Photo: John Deere Ltd)*

ISSN 1363-8300

WATER MEADOWS IN SOUTHERN ENGLAND

Kathy Stearne, Hadrian Cook and Peter Stearne

Water meadows were one of the first intensive land management systems dating back to the 1600s and the 'Drowners', men who designed and operated the systems, were the forerunner of today's Agricultural Engineer. Water meadows were once a common feature of river valleys in southern England. A sustainable form of agriculture, water meadows integrate soil and water management to irrigate grass and trigger sward growth. Today they are seen as extensive systems with high environmental value. Successful management and conflict resolution for today's objectives require an understanding of the history and processes by which the meadows operate.

Water meadows at Ellingham on the River Avon - Grid Ref. SU 144085

The water meadow system

Part of the heritage of southern England,water meadows have been painted by Constable and written of by Thomas Hardy. Water meadows were economically important between about 1600 and 1930 but they have largely been abandoned since. Once a common feature of river valleys, they are a sustainable form of agriculture that integrates soil and water management in an innovative way by irrigation of grass in the winter and early spring to trigger growth and sometimes again in the late season to force a hay crop.

Rising investment in agri-environmental schemes presents opportunities for restoration by offering grants towards capital and management costs, causing a resurgence of interest in the meadows.This now means that landowners have an incentive to restore these systems.While an historical and hydrological objective might be to function in their former state, the growing interest in enhancement of the floodplain environment for flora and fauna management and conservation may cause goal conflicts to arise. For successful conflict resolution an understanding of the history and processes by which the meadows once operated is required, along with knowledge of the ecological potential of the present systems, before any irreversible action is taken.

Although the broad outline of water meadow technology is known, detail is all too often sadly, missing.The water meadows were agricultural systems of surface irrigation designed to produce a lush growth of grass early in the season.This 'early bite'meant that livestock could be grazed in early spring, reducing the requirements for winter fodder (Betty, 1999).The design, operation and, specific end use of the water meadow depended on the valley, geology, topography, economics, and diversity of the people operating them. Most water meadow systems are located on alluvial soils of the floodplain, or the adjacent terraces.This valley bottom design is termed 'bedwork' water meadows where water is diverted from a main river, often via a canal or 'main carrier'through control structures (weirs,hatches, sluices,etc) into channels tapered so as to spill down the sides of specially constructed ridges called 'panes'.The recommended depth for flow through the root mat and stems of the sward is no greater than 25 mm.

History of management

Historically, the only detailed text on water meadow management was by Boswell in

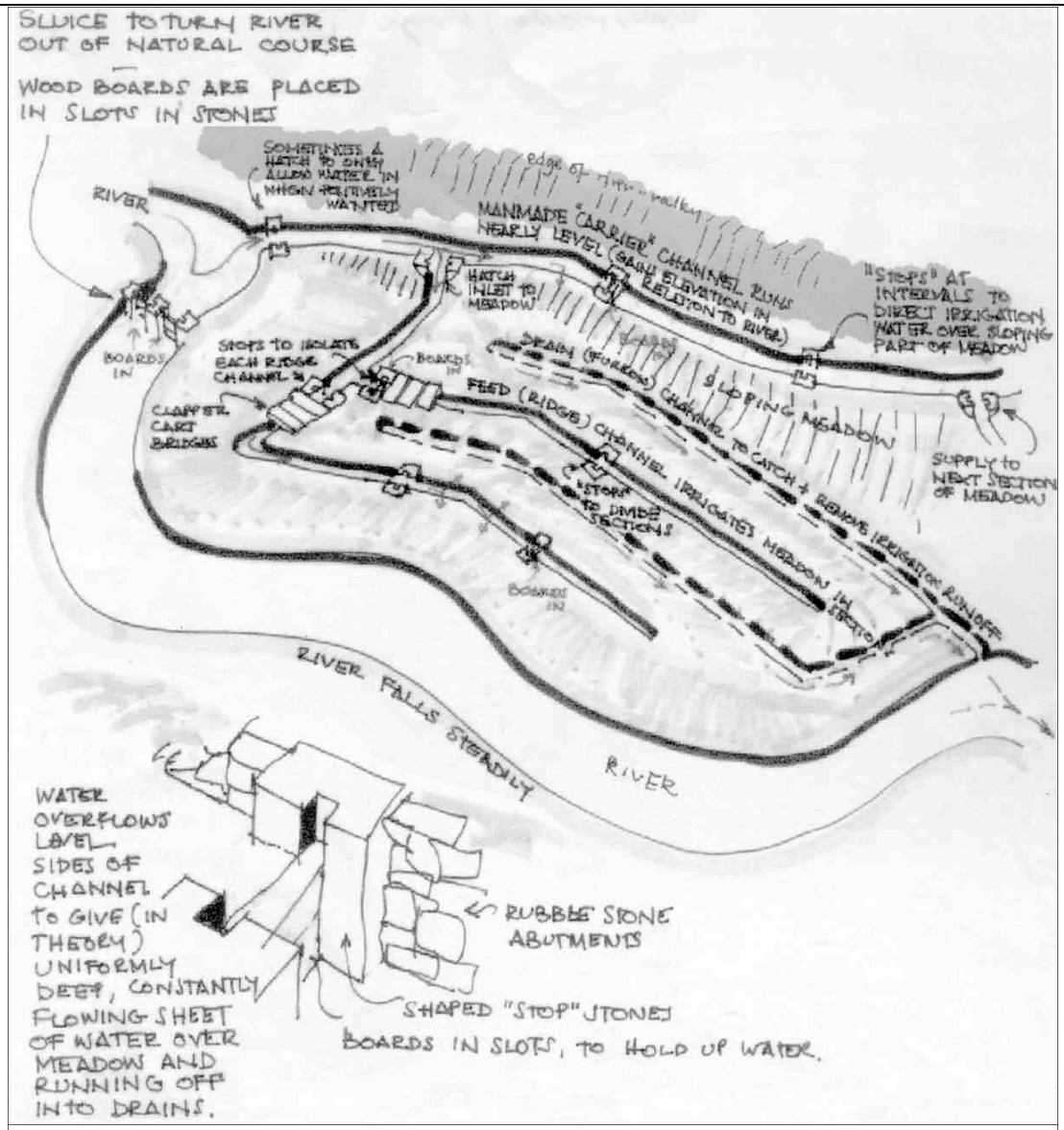

Fig. 1 Illustration of the workings of a water meadow in detail

1779. He describes a system of managed flooding during the winter, stating that it acted

BIO NOTE

Kathy Stearne MIAgrE is a Soil & Water Engineer who graduated from Reading University with a degree in Soil Science. She has worked for MAFF and DEFRA as a soil & water engineer for the past 20 years. She is at present carrying out research into water meadow technology with Imperial College at Wye.
Hadrian Cook is Senior Lecturer at Imperial College at Wye.
Peter Stearne MIAgrE is a Consultant Horticultural Engineer with Green Mark International and has a keen interest in the historical agricultural environment.
Green Mark International, 18A Chalet Hill, Bordon, Hants, GU35 0TQ. Tel/Fax: 01420 476565 E-mail: peter.stearne@btinternet.com

Sheep were grazed on the meadows during the day from March onwards; a full month before the spring grazing was available elsewhere. At night the flock was folded on the arable land,where the sheep dung manured the thin chalk soils of the area.In May the water meadows were irrigated for a short period and then shut up for hay. Later summer and autumn saw cattle grazing the meadows, and maintenance work was carried out.

Boswell recommended flooding in October to catch the first floods of autumn, which he considered to bring silt and nutrients to fertilise the meadows. Most,though not all,water meadows were in chalk stream river valleys, so the water is very likely to have had a liming effect on the soils.

Construction

Although expensive to build and labour intensive to manage, their construction could increase the (rental) value of a meadow increased three or four fold (Betty, 1999). Water meadows were most expensive to construct on peat soils, but the increase in value of the land could be 10 times or more (Kerridge, 1967). Increasing productivity for several years after construction would reflect effects such as liming, nutrient enrichment, warming including a degree of frost protection effect (Cutting & Cummings, 1999).

The sheep were folded on the arable land at night and because of this, the fertility of the arable land increased, this too is attested in the historical literature. Kerridge (1953) claimed that, without the water meadows, Wiltshire could not have supported as many sheep of as great a size.

'The sheepfold was estimated to increase the barley yield by a quarter of barley an acre (34 kg/ha).The yield of corn was directly dependent on the number and size of the sheep. These in turn were dependent on the winter feed available' (Kerridge, 1953).

Today places,on the steeper slopes of the chalk, yield artefacts in evidence of the practice, such as the sheep bells. It is doubtful if any physical signs of the sheepfold remain today due to the temporary nature of the fold and, increased mechanisation of modern farming obscuring the evidence.

Abandonment of water meadows

The water meadows were generally abandoned between 1918 and 1960 and certainly were in serious decline from around 1940 onwards (Moon & Green,1940),especially as a result of post-Second World War agriculture. Consequently, the historical research has concentrated on discussion of past literature and documents relating to water meadows, until the Survey of Hampshire Water Meadows in January 2000.This was commissioned by the County Council in

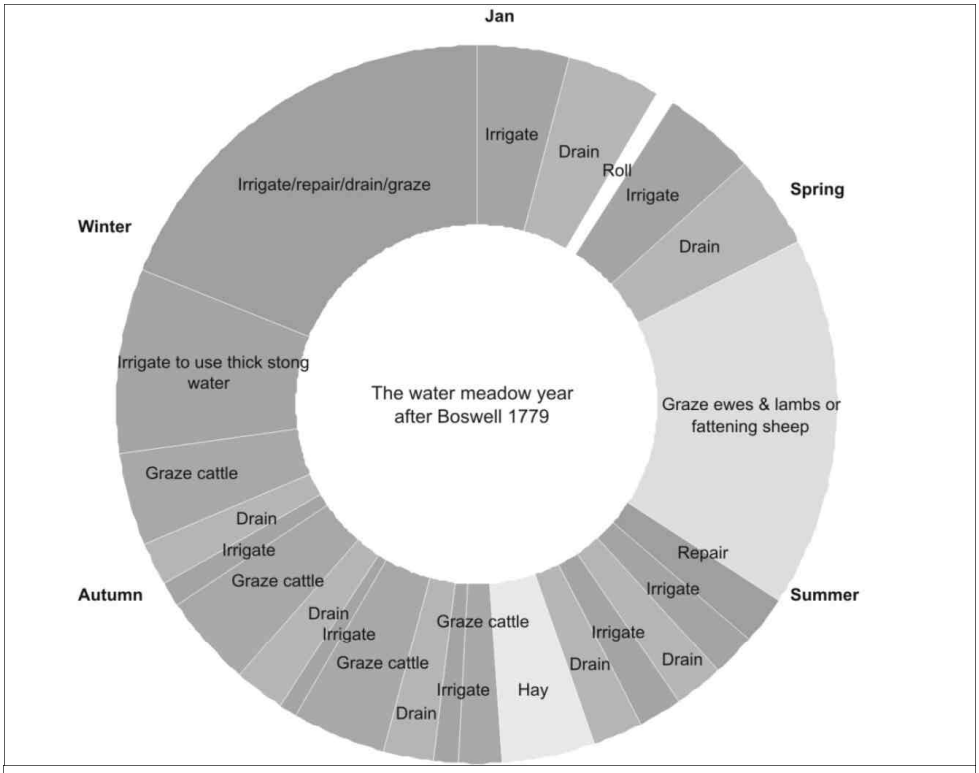

Fig. 2 Chart showing the annual management cycle of a water meadow after Boswell 1779; Boswell gives a clear description of the management of water meadows. He describes in detail the different lengths of time a water meadow can be irrigated in winter, spring and summer; sheep grazing in the spring; the hay crop and the cattle grazing in the autumn.

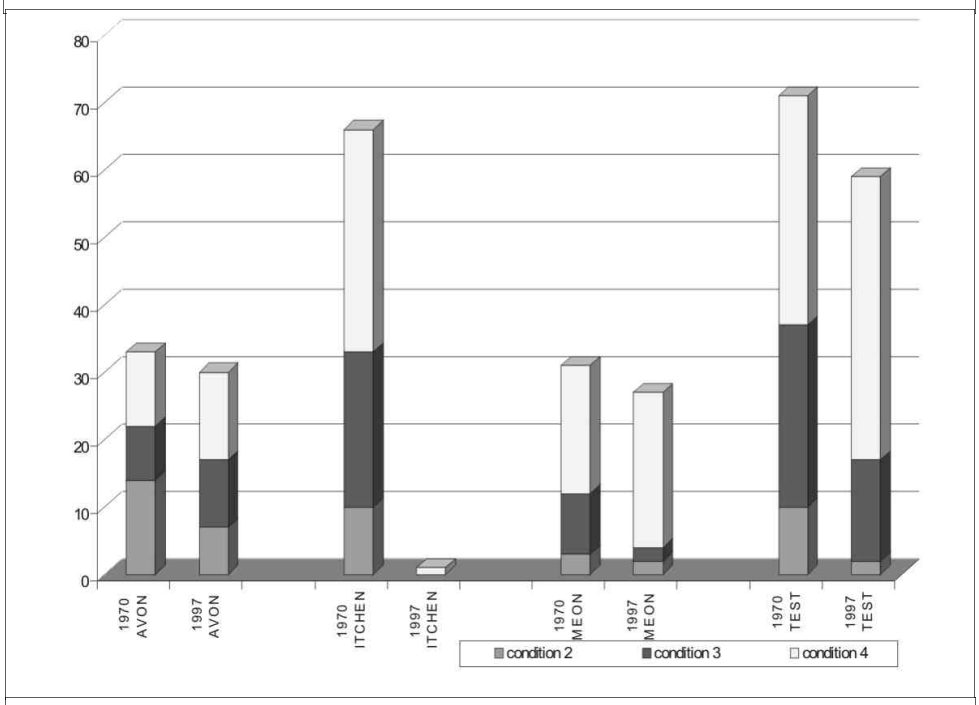

Fig. 3 Bar chart showing the decline in the number of water meadows in the Hampshire River Valleys between 1970 and 1997; data taken from the Hampshire Water Meadows Survey 2000

order to assess the extent and present-day condition of water meadow systems. Prior to this, archaeologists also seem to have ignored water meadows, perhaps because the abandoned sites were indeed commonplace. This survey now represents an important step forward in the recognition of water meadows as historical and archeologically important in the landscape. Figure 3 shows an example of the mapping undertaken in this survey.

However as a desk-based survey gathering information from maps and aerial photographs, it has limitations and it also missed some important aspects; for example the water meadows along the River Wey (Bowles, 1988). These important systems are now tree covered, and the type and frequency of different structures are not recorded. However, the survey does highlight the loss of water meadows over the past 30 years and attempts to indicate their present condition.

Archaeological and ecological interest of the meadows

Archaeologically, you may ask what is likely to be important on water meadow sites. There are the structures associated with irrigation, including aqueducts, sluices hatches and bridges, all using different construction and materials (stone, brick concrete iron, and wood). The iron work and sluice mechanisms found on water meadows are an important part of industrial archaeology that is all to often missed. Some features are still to be seen on the surface but many are buried, especially on the peat soils. Their relative abundance or rarity is unknown, so it is unknown which are worth conserving. It is also probably impractical and uneconomic to conserve them all.

The Topography, including some ridge and furrow, is easily seen today, demonstrated clearly in the title photograph. Still highly visible too, are certain control structures shown in both the Test Valley and the Avon Valley photographs. In other areas, evidence of a water meadows previous existence has disappeared, for various reasons. The flora and fauna of an area may also give a clue to the past management. Today, ecologists show great interest in the calcareous fens of the Itchen Valley (Tubbs, 1977). We might well

ask whether calcareous fens have been maintained and expanded as a result water meadow irrigation? It is equally possible the pH and areas of calcareous fen will decrease now that traditional watering has ceased.

Few water meadows have protection for historical reasons,due perhaps to them being regarded as commonplace. During the second half of the twentieth century, there was even a desire to remove features whose topography and infrastructures were seen as inconvenient to farming and river management (including flood alleviation). Consequently, few water meadows have historical designation.For example, the three aqueducts on the River Wey are Scheduled Ancient Monuments (SAM), and these would seem to be the only water meadows structures protected by legislation. Not only are water meadows historically significant, they are also ecologically important for flora and fauna.

The Nature Conservancy Council identifies the chalk streams themselves as Sites of Special Scientific Interest (SSSI) and the water meadow management does directly affect the chalk rivers. Many of the areas although not SSSIs,have ecological recognition and protection. Ramsar Convention Bureau provide protection for some such areas.The bureau's mission is the conservation and wise use of wetlands by national action and international co-operation as a means to achieving sustainable development throughout the world. Some areas are also candidates for Special Protection Areas (cSPAs) designated by the European Union in order to protect endangered species such as the EU Birds Directive (Council Directive 79/409/EEC).A number of areas are also candidates for Special Area of Conservation (cSACs) under the EU Habitats Directive (Council Directive 7992/43/EEC).

Iron sluice with brickwork overflow in Test Valley - Grid Ref. SU 479481

Some examples are: overwintering bird and breeding wader habitat is protected at Titchfield Haven an SSSI and Ramsar site, National Grid Reference SU 539035;The Southern Damselfly habitat on the southern part of the River Itchen is protected by SSSI and cSAC designations. National Grid Reference SU 599324 to SU 439153

Designation of water meadow features as Sites of Ancient Monument (SAMs) may not be the best option because it is somewhat draconian and prevents easy alteration of structures in the interest of continued operation,while the 'Listed Buildings' legislation which would allow more flexibility is not applicable to the water meadows and their associated structures, yet some protection of structures for their intrinsic historic and archaeological interest is arguably essential, before water meadows become wetland sites of ecological interest that ignores their historic agricultural function and archaeological and landscape value!

Stone sluice with wooden boards – Avon Valley Grid Ref. SU 125352

Conclusion

Water meadows were intensive agricultural systems for 400 years, but their Historical Significance is in danger of being lost.The technology is falling into disuse and knowledge of their operation is also lost as the farmers who operated these systems died. Fortunately, conservation may be assured in instances where there is a conservation designation,including examples of international significance. Yet the goal conflict arises where, in the interest of habitat protection for flora and fauna, neglect,destruction of original features and altered hydrological regimes obliterate their original purpose as a 'hot bed' of grass production. Management of these sites needs careful consideration.

Historical research has concentrated on discussion of past literature and documents relating to water meadows. Ecologists,historians and engineers have missed important aspects by not understanding each other and,importantly, by not listening to the farmers and managers who understand these areas. To correct such an oversight, the aims of management,practicality and cost of work, ongoing grazing and watering systems need to be explored and laid out in management plans.In this way, landowners will receive concrete guidelines for conservation and avoid goal conflicts of different priorities.

There is a role here for the agricultural engineer and archaeologists who can play an important part in describing water meadow sites, their topography and infrastructures and also identify processes that have made these valleys so special – in historical, agri-

Bramshot Aqueduct – Wey Valley Grid Ref. SU 838334 (photo: A Bird, River Wey Trust)

cultural and ecological terms. The aim is to elucidate site history, functionality, evaluate the present condition and set management prescriptions for the future.

Green Mark International is currently sponsoring research into water meadow technology and management in conjunction with Imperial College at Wye.

References

Betty J.1999
The development of water meadows in the southern counties. Water Management in the English Landscape Ed Cook/Williamson. Ch. 15.Pp 179-195 ISBN 1-85331-206-1

Boswell G.
1779 Treatise on Water Meadows,A.Almond

Bowie GGS,
1987 Water meadows in Wessex – a re-evaluation for the period 1640-1850 Agricultural History Review Vol.35 Part 2.Pp 151-158

Bowles N.1988
The Southern Wey, A Guide. The River Wey Trust.ISBN 0 9514187 0 X

Cutting R.and Cummings I.1999
Water meadows:their form, operation and plant ecology. Water Management in the English Ed Cook/Williamson. Landscape Ch. 11.Pp 157-178.ISBN 1-85331-206-1

English Nature. SSSI notifications:
- Britford Water Meadows, 1987
- Lower Woodford,1987
- The River Itchen further notification,August 2000
- Titchfield Haven,1979

Hampshire County Council 2000.Hampshire Water Meadows Survey, in 3 volumes

Kerridge E.1953
Sheepfold in Wiltshire and the floating of the water meadows,The Economic Review Vol.VI,pp 282-289

Kerridge E.1967
Floating the water meadows The Agricultural Revolution. Allen & Unwin Ch.VI

Tubbs C. 1977
Ecological appraisal of the Itchen valley flood plain.Hants Field Arch.Club.Vol.34.Pp 5 – 24

ENVIRONMENT

The LEAF Marque Scheme

What is it?

The LEAF Marque Scheme is a robust standard, applicable to all sectors of agriculture. It enables farmers to demonstrate their environmental credentials to customers.The scheme has been developed by LEAF (Linking Environment And Farmers) in consultation with others.It recognises the efforts of farmers to meet customers' needs by carrying out Integrated Farm Management.

What does the LEAF Marque Scheme offer?

The scheme will bring benefits to farmers, consumers and the environment.

• **For farmers** – it will provide recognition for producing quality food alongside environmental protection and enhancement.

• **For consumers** – it will give greater consumer confidence of the care farmers take to produce quality British food. It will offer a guarantee that their food has been produced in an environmentally responsible way.

• **For the environment** – the care and attention demanded by an Integrated Farm Management (IFM) system has environmental benefits in its own right – for soil health,biodiversity and a living countryside.

A vision for the LEAF Marque

Many of the major retailers are already stating their support for the LEAF Marque scheme, including Waitrose, Marks and Spencer, and Safeway. It is anticipated that the LEAF Marque will quickly become a nationally accepted and respected environmental symbol that consumers recognise and trust.

Caroline Drummond,Chief Executive of LEAF, has been involved in sustainable farming for over eleven years and in the agricultural industry for over twenty years.She says: "What concerns me is that,as we become more accountable to our customers and have to develop 'measurable outcomes', we lose sight of the practicalities.

"We have to devise ways to give recognition to the experience and wisdom accumulated by farmers over the years. We have to find ways to trust.

"We need to decide which new technologies and which traditional approaches give us the best quality of life. The Organisation for Ecomomic Co-operation and Development (OECD) estimates that world agri-food production will have to double in the next half century in order to meet increased demand for food.The challenge is whether agricultural activities can efficiently and profitably produce food to meet that growing demand over time, without degrading natural resources and do so in socially acceptable ways.

"We still need to produce safe, healthy food and non-food products in response to market demands,and we need to reward farmers for the public benefits they generate…we need an industry which is founded on solid,accepted principles,which brings benefits to its many stakeholders.An industry which is valued and trusted."

Interested in LEAF membership?

LEAF has been at the centre of promoting sustainable agriculture for over ten years.As a member you will receive technical information to help you adopt IFM; access to their national network of Demonstration Farms;invitations to members' events across the country;training and talks on IFM;as well as a free subscription to their quarterly magazine – the LEAFletter.

There are a number of ways members can promote LEAF's work and raise the profile of IFM:

• by becoming a LEAF Supporter, or Audit Ambassador and helping us get the message across 'on the ground';

• by doing the LEAF Audit;

• by arranging a visit to your nearest LEAF Demonstration Farm;

• by asking your supermarket manager about IFM produce;

• by buying a copy of LEAF's Virtual Farm Walk.

MORE INFORMATION

LEAF, The National Agricultural Centre, Stoneleigh, Warwickshire CV8 2LZ. Tel: 02476 413911. Fax: 02476 413636. Email: enquiries@leafuk.org Web: www.leafmarque.com Individual, Corporate, College and Overseas memberships are available.

COMPETITION

Chance to shine for farm contractors

Contractors, more than ever, play an intrinsic part in modern farming. The Contractor of the Year award is a national scheme that acknowledges and rewards that contribution. Organiser Farm Contractor magazine is hoping for a record entry to the competition after its absence from last year's calendar due to Foot and Mouth Disease.

Not only is a £2,000 prize at stake, but also the chance to raise the profile of the business with existing and prospective customers. Previous winners say that citing the award has even helped in negotiations with the bank manager!

Entries are self-nominated. And,while equipment manufacturer New Holland is the competition sponsor, previous results bear out the organiser's claim that the colour of the contractor's machinery fleet does not influence the judges' decision.

Five finalists, selected to represent the Scottish, Northern, Midlands,East Anglian and Wales & West regions, will enjoy a prize of an exclusive weekend break where the ultimate winner will be announced.

MORE INFORMATION

Phone Farm Contractor on 01869 338936 for an easy-to-complete application form, to be returned by Monday 16 December. On-site judging for short-listed entries is scheduled to take place in early 2003.

GLOBAL WARMING

Climate change to have ups and downs for Britain's trees

Forest managers are being urged by the Government to think ahead and start planning for the effects of global warming.At the publication of a Forestry Commission report on climate change and its impact on forests,Forestry Minister Elliot Morley said forestry practice would need to adapt.

Experts predict that the impact of climate change will be both negative and positive for forests.While it is difficult to be certain about what changes will happen, it was clear that this was already taking its toll. In much of continental Europe, most forests are growing faster now than they did in the early part of the last century, and in Britain spring activity of several tree species has advanced by up to a month in recent decades.

Some of the report's predictions are included below.

Temperature change

Harder autumn frosts will be more damaging, particularly in England,and temperature extremes can be expected to kill off some species with the result that the mix of trees that make up of our forests may well change. Norway spruce – our traditional Christmas tree – could cease to be grown in England altogether. Deer and grey squirrel numbers are likely to rise, posing an even greater threat to trees unless control measures are stepped up. Temperature rise will also encourage the development of insect pests such as the Green Spruce Aphid and could lead to more exotic pests,which Britain has so far been able to keep at bay, taking hold. On the other hand, higher summer temperatures along with rising CO2 emissions will mean that trees will absorb more carbon over the next 50 -100 years, so forests will grow faster and timber production will increase.

Floods and drought

Increased winter rainfall may raise the water table sufficiently to kill off roots, making trees more prone to summer droughts.In the South and East increasingly severe and more frequent summer droughts could kill off newly planted trees and mature trees in hedgerows and in our towns and cities. Distress in water-starved trees may make them more susceptible to diseases caused by fungi, while the reduction in the number of rainy days in summer may reduce the spread of leaf diseases.

Wind

Current forest management has evolved to take account of the UK's extreme wind conditions, but uncertainty over the frequency of gales suggests that further action might still be needed.The report suggests that foresight will allow managers to alleviate the impact. For example, by planting trees on land which is prone to flooding, and avoiding areas which may become susceptible to drought.

Speaking at the launch, Mr Morley said: "Climate change will have a variety of impacts on our forests.Our trees and woodlands play a role in locking up carbon, are a source of renewable energy and a very sustainable construction material. But they are themselves also vulnerable to environmental change.

"As the evidence demonstrates, we will need to adapt to some climate change. We are taking early action to assess our vulnerability and to identify priorities. Our forestry practices are based on our current state of knowledge of the most likely effects of climate change. They will have to be reviewed and revised as we gain in our understanding of the impacts and the consequences of climate change."

SAFETY AT WORK

HSE publishes revised advice on first aid at work

The Health and Safety Executive (HSE) has revised 'Basic advice on first aid at work' which will now be available in both leaflet and poster formats in line with the latest recommendations on first aid practice from the Resuscitation Council (UK).

Together with a revised version of the poster 'Electric shock first aid procedures'the new publications have been designed for easy display purposes and to assist first aiders. In addition,as part of their legal requirement,employers can meet duties set out under the 1981 Health and Safety (First-Aid) Regulations of assessing their first aid needs and providing adequate facilities,equipment and personnel in the workplace.

The revised guidance will help first aiders in minimising the consequence of injury and illness of people in the workplace until expert help can be obtained. The information not only covers how to resuscitate a casualty, but how to deal with severe bleeding and treatment of broken bones, burns and eye injuries.

The electric shock poster also advises on breaking the contact between an electrical source and a casualty, making the area safe before administering first aid.

Dr Richard Elliott of HSE's Health Directorate commented,"The revised publications are not a substitute for effective training in first aid. However, they will serve as helpful reminders to qualified first aiders of the essential steps to follow in an emergency. Appropriate and timely action in an emergency can save lives."

MORE INFORMATION

Leaflets and posters are available from: HSE Books, PO Box 1999, Sudbury, Suffolk, CO10 2WA. Tel: 01787 881165. Fax: 01787 313995.

WOODLAND NETWORKS

Woodland jigsaw is taking shape

Well over 200 hectares of new woodland will be planted across 41 carefully selected locations in England in the second round of the £5 million special grant scheme called JIGSAW, Forestry Minister Elliot Morley announced recently.

The Forestry Commission JIGSAW Challenge Fund helps support the planting of native species to join together fragmented woodland. Under the Challenge, launched in 2000, the total area of new native woodland to be approved for planting so far is 465 hectares – amounting to half a million trees. The scheme has three more years to run.

"JIGSAW targets grants to reverse the fragmentation of woodland,an important priority in the Government's England Forestry Strategy," Mr Morley said. "The long term sustainability of natural woodland habitats for wildlife, particularly endangered species,is a key priority in the strategy.

"Woodland species can become trapped within small and isolated woodland and this increases the threat that they will eventually disappear. The simple act of joining even two woods together with appropriately designed new woodland significantly increases the ecological viability of both.

"JIGSAW is helping to ensure that important fragmented woodlands become more robust,and start to link into a network of natural areas within the countryside. In time this will reduce the threat to the wildlife communities that are dependent on native woodland."

There is at least one JIGSAW target area in each region. These are chosen according to their potential for meeting the objectives of JIGSAW and where the local landscape character is suitable.

For further information on the next round of JIGSAW land managers should contact their local Forestry Commission Conservancy office. Expressions of interest must be made by 30 November 2002, and firm bids must be received by 28 February 2003. Successful Round Three bids must be planted and the grant claimed by 14 March 2004.

MORE INFORMATION

Contact details for FC offices around England are available in the phone book, or from the Commission's National Office for England in Cambridge. Tel: 01223 314546. Email: fc.nat.off.eng@forestry.gsi.gov.uk Web: www.forestry.gov.uk

CAREER ADVICE

Environmental Careers – all you need to know!

The Chartered Institution of Water and Environmental Management (CIWEM) is working on a comprehensive book and web site www.environmental-careers.info on the subject of careers in the environment sector. The book will be published in December 2002 at a subsidised cost and it will be updated every two years.

It is estimated that over 80% of environmental graduates are not currently working in the environment sector, and this publication aims to assist people largely in the age group 16–25 to develop a career in this field. Also, there are several areas of specialist work where suitable candidates are in short supply and this publication seeks to stimulate interest and improve graduate and candidate suitability. The book and web site will be an ongoing reference and resource for libraries,careers services and organisations in the environment sector which communicate with job seekers.

Supporters of the publication include members of industry, regulators, non-governmental organisations, consultancies and academia. CIWEM is seeking further partners for the publication, as well as sponsors and advertisers. Additional income from supporters will enable the book to be published at a cost which will make it easily available to younger people not yet established in the environment sector.

The web site www.environmental-careers.info is the focus for updates of the book's progress to publication. When the book is launched,the web site will contain helpful careers information and it will be the focus for comments on the book's first edition. In this way we will ensure that the second edition is developed to cover any shortcomings and updated information from the first edition. The publication will keep up to date with developments in the sector.

The book will contain valuable insights from environmental and careers professionals and the book is split into chapters for main environment sectors such as nature conservation, water resources,flood defence, fisheries, contaminated land and the environmental media. There are special chapters which include general advice on getting a first job and career development,placements, working for main employers in the sector and opportunities for employment abroad.

CIWEM's Executive Director, Nick Reeves, notes "there is a paucity of comprehensive 'inside information'specifically written for those seeking an environment sector career and for organisations supporting these people. Many young people who are committed to improving the environment cannot find employment in the sector and this is a great loss. This publication will ensure that the best and most current advice is available from sector experts."

HOLSWORTHY BIOGAS PLANT

Jørgen Fink

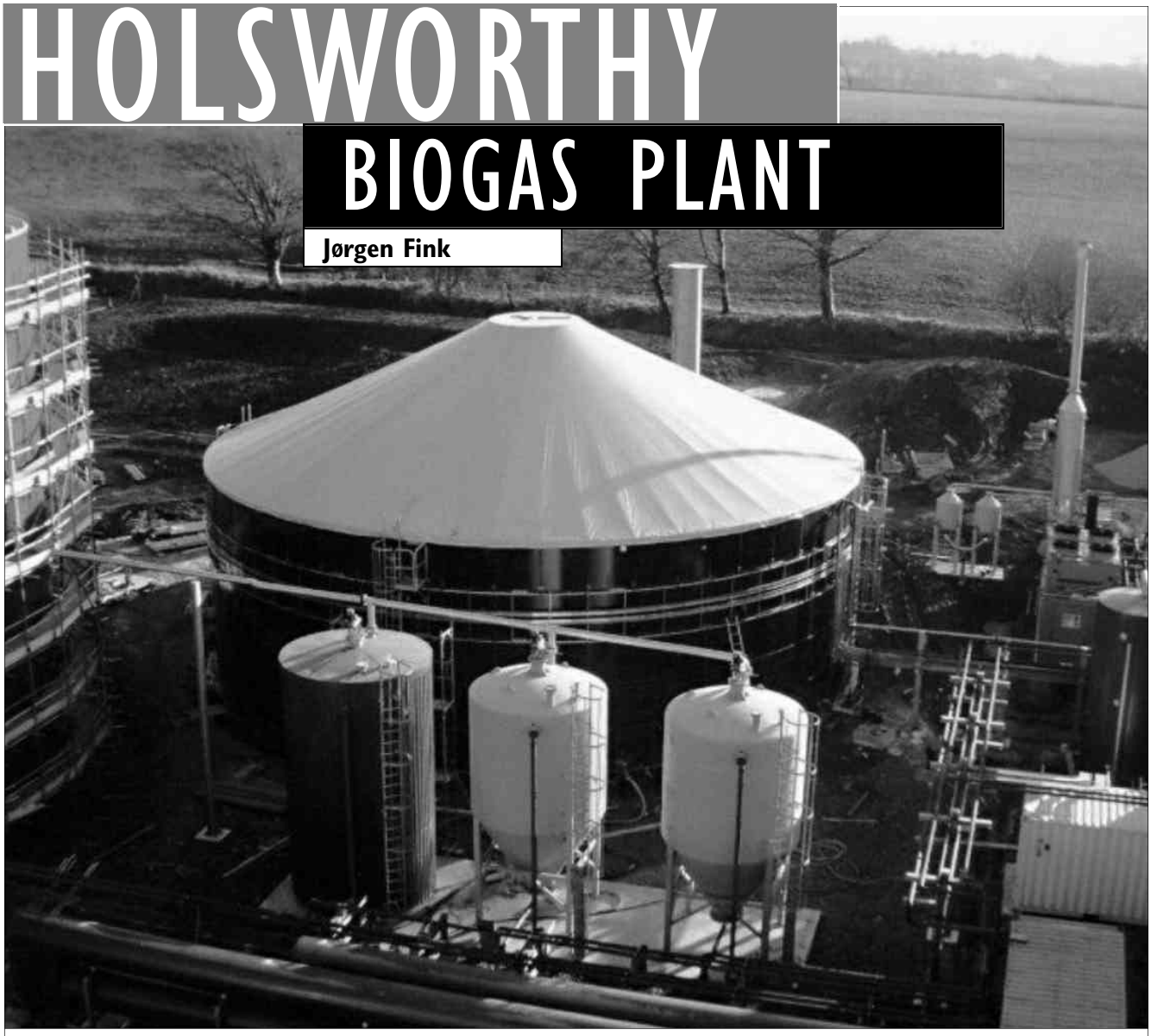

Holsworthy Biogas under construction, with the mixing tank (centre), a digester (left), two combined heat and power (CHP) units (right) and the three pasteurisation tanks plus the horizontal heat exchangers in the immediate foreground (Photo: Farmatic Biotech Energy UK Ltd)

Introduction

Construction of the UK's first, large-scale anaerobic digestion plant is now nearing completion at the market town of Holsworthy in Devon. The plant has been built by the German Company Farmatic Biotech Energy AG.The company is also a shareholder in the project, which was established in 1998. The local community and the supplying farmers will hold the remaining shares.

Farmatic started construction in February 2001 and aims to have the plant ready for operation by January 2002, with full production envisaged by May/June 2002. Farmatic will also assume responsibility for the ongoing plant maintenance.

Processing explained

Holsworthy Biogas will eventually process 146,000 tonnes per annum of cattle, pig and poultry manure plus organic food waste. The manure will be collected from 25-30 local farms within a 15 km radius of the plant. The food processing waste will be collected direct from food processors in the South West.

BIO NOTE

Jørgen Fink is Managing Director of Farmatic Biotech Energy UK Ltd, Chilsworthy, Holsworthy, Devon EX22 7HH Tel/Fax: 01409 254 888 E-mail: fink@farmatic.co.uk

The manure and food waste is first discharged into a reception pit. During unloading a ventilation system operates in the receiving hall. The air taken from the hall passes through a bio-filter in order to reduce any risk of odour.

The manure and waste are thoroughly mixed before being discharged into a larger mixing tank. The mixture is then heated to 70°C through a three-stage heat exchanger. The pasteurisation process

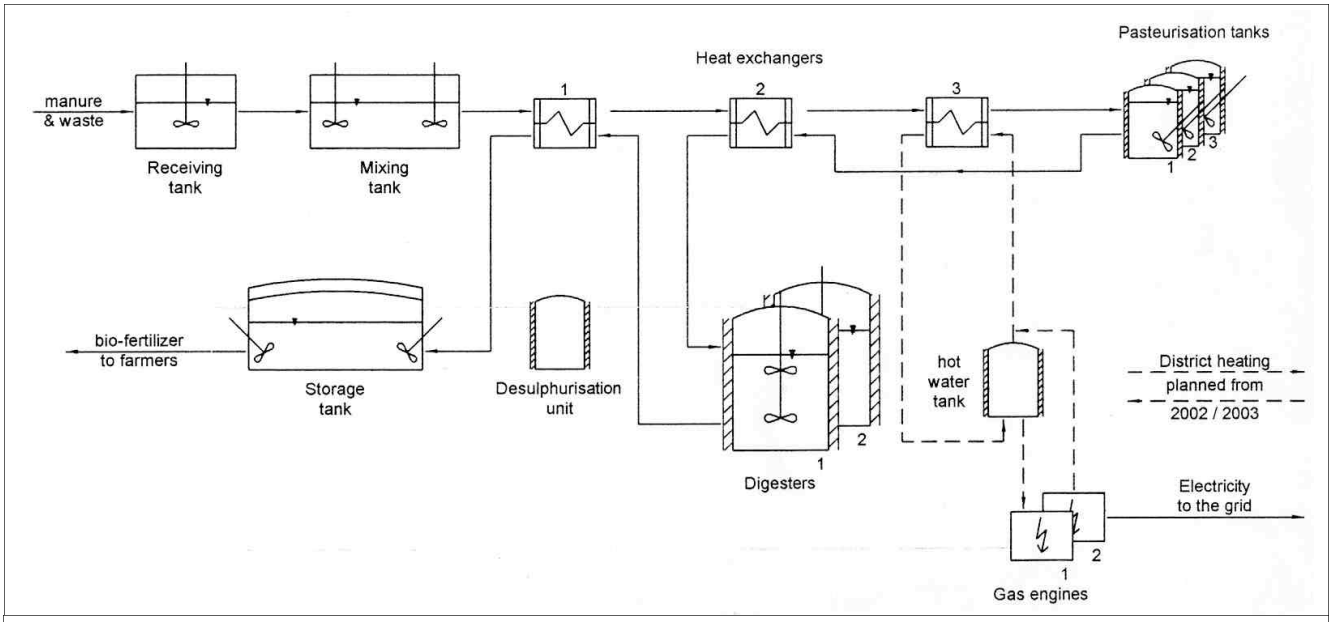

Fig. 1 Flow chart for Holsworthy Biogas with substrate flow shown as a solid line and hot water flow as a broken line (Photo: Farmatic Biotech Energy Ltd)

takes one hour and kills all pathogens, viruses and weed seeds. The material that eventually leaves the plant is therefore safe for farmers to spread on their fields, and the risk of disease has been removed.

After pasteurisation the mixture is pumped through the heat exchanger into either of the two 4000 m3 digesters located at the plant. Anaerobic digestion takes place at 37°C with an average retention of 20 days in either tank. The biogas released by the digestion process is methane gas. It is initially cleaned in a desulphurisation unit and then stored in a gasholder above the final storage tank. The digested waste mixture is eventually returned to the supplying farmers as a valuable bio-fertiliser.

The plant will operate its own lorries, transporting the bio-fertiliser to the supplying farms and then returning with animal manure, The new lorries are specially designed for the task and can load 20 tonnes of manure in two minutes.

Funding

Holsworthy Biogas Ltd has benefited from a £3.85 million European Union (EU) grant from the Objective 5(b) EAGGF programme administered by the Department of the Environment, Food and Rural Affairs (DEFRA) and their local district council of Torridge. The total project cost will be £7.7m.

Extra storage facilities to hold the bio-fertiliser are provided on the farms by Holsworthy Biogas. This has been possible because of the EU grant. The bio-fertiliser has a higher nutrient value, than the original animal manure, which means that farmers can reduce their use of mineral fertiliser. The extra storage capacity provided on the farm means that farmers only have to spread the fertiliser during the growing season. This obviously helps minimise any risk of pollution.

The total gas production is budgeted at 3.9 million m3 methane per year which equates to 39 GWh of energy per year. The methane produced by the plant will be used to generate electricity and heat by powering two, V-20 gas engines. They have a combined total power capacity of 2.1 MW whereas the budgeted power production is 14.4 GWh per year.

Electricity produced will be sold at 5.72p per kWh (2001 price level) according to the Non-Fossil Fuel Obligation (NFFO) contract granted to Holsworthy Biogas. The price is index-linked and will increase over time according to the Retail Price Index.

District heating system

It is anticipated that all the excess heat produced by the plant will eventually be sold through a new district heating system which will supply

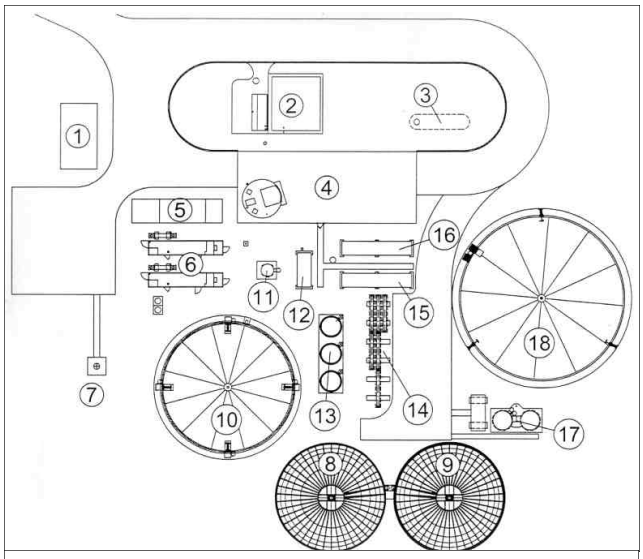

Fig. 2 Site plan of Holsworthy Biogas: (1) office; (2) air cleaning; (3) condenser tank; (4) receiving hall; (5) transformer house; (6) CHP-units; (7) flare; (8) digester I; (9) digester II; (10) mixing tank; (11) heat accumulation tank; (12) boiler; (13) pasteurisation tanks; (14) heat exchangers; (15) pump container; (16) gas container; (17) desulphurisation tanks; (18) storage tank;

the market town of Holsworthy. The amount of heat available to supply the district heating will be about 15 GWh per year. Initially it is planned that the hot water will be used to heat the town's new hospital and school.

The anaerobic digestion of manure and waste not only has a positive influence on the environment, but also offers many direct advantages to the farming sector, namely, reduction in:

- risk of spreading disease
- emissions to air, including greenhouse gas
- odour problems
- consumption of mineral fertilisers
- need for land-fill with the increased recycling of waste
- surface and ground water pollution

First of several plants in UK

The project in Holsworthy, which is based on many years' experience gained from the successful operation of similar plants in Germany and Denmark, is expected to be the first of several anaerobic digestion plants in the UK.

Jørgen Fink, Managing Director of Farmatic (UK) Ltd,believes that there is potential in the UK to build at least 100 plants. These would either be plants that co-digest animal manure and food waste, as with Holsworthy, or plants that just digest food and household wastes. Mr Fink's vision does not appear unrealistic when he adds that in Denmark they have 20 biogas plants serving a population of only five million people.

FOOD TECHNOLOGY

UK companies join the Global Partnership Initiative to improve food production in the Developing World

Improving food production in the developing world was the key aim of UK agrofood technology companies at the Royal Show, Stoneleigh, where they met delegates from developing countries to share their expertise.

Improved technology has the potential to reduce the level of wasted agricultural produce – in some countries representing more than half of harvested food.

The Global Partnerships Initiative is organised jointly by Trade Partners UK – the Government's agency to help UK businesses trade internationally – and DEFRA, the Government department responsible for agriculture. Its aim is to promote business opportunities for the UK's leading edge agricultural companies – a sector badly hit by last year's Foot and Mouth epidemic – while helping to increase global food production through joint ventures in the developing world.

The target is to set up at least 30 joint ventures and partnerships between UK companies and their counterparts in the developing world, and secure £15 million worth of business for the UK companies taking part.

With the world population set to grow from six billion to eight billion by 2025, mostly in developing countries, global agricultural output will have to increase by 50% over the same period. Currently more than 40% of agricultural production in the developing world is lost, often through lack of post harvest and processing technologies, basic skills and poor equipment, logistics, storage and handling (United Nations figures).

Baroness Symons, the Minister for International Trade, is supporting the initiative. She said: "Developing more safe and efficient food production is one of the world's most important challenges. Our food retail sector is one of the most demanding in the world. Suppliers have had to rise to the challenge of meeting the most stringent environmental, quality, safety and consumer requirements.

"The result is an industry that now has advanced capabilities in equipment, techniques and expertise to offer solutions through partnerships and technology transfers to the rest of the world."

"Now we can use that expertise to help address serious food supply problems in the developing world."

The Global Partnerships Initiative got underway at the Royal Show with a special 'Global Partnerships Pavilion' to promote the strengths of the UK's agrofood industry, under the banner 'Science into Practice'. The pavillion demonstrated a representative slice of Britain's agrofood sector, with a total of 54 companies taking part from right across the UK, from Norfolk to Devon, and from Sussex to Kilmarnock.

The companies included manufacturers of high-tech agricultural equipment; research and development organisations; biological experts; and information technology (IT) experts. Over 200 international visitors showed an interest, with delegations from countries such as China, India, Africa, Mexico and central Europe. The organisers have also been working with the United Nations Industrial Development Organisation (UNIDO). The project is supported by regional development agency, Advantage West Midlands.

The Director of the Global Partnerships Initiative, Philippa David, said:

"This is the first time we have done something like this at the Royal Show and we believe it is the ideal platform for presenting UK excellence to a wide international audience. The set up was quite relaxed and informal. Visitors were encouraged to come to the area to network and meet UK companies to discuss potential partnerships and business opportunities."

MORE INFORMATION

Contact Project Director Philippa David. Tel: 00 44 (0) 121 380 3665. Web: www.tradepartners.gov.uk

HSC helps businesses work out costs of health and safety failures

At the British Chambers of Commerce annual conference in London, the Health and Safety Commission (HSC) launched a 'ready reckoner' for Britain's businesses to help them work out how much work-related accidents and ill-health are costing them.

Health and safety failures currently cost Britain's employers up to a staggering £6.5 billion every year. Over 25 million working days are lost annually, with over a million workers suffering from work-related accidents and even more falling prey to work-related ill health.

The ready reckoner is particularly designed to help small and medium-sized businesses (SMEs). The reckoner explains the associated costs of accidents and ill health at work,helps users to work out how much their own firm might be losing,and provides advice on how to avoid such costs. It also includes real-life case studies showing costs to firms that have suffered financially as a result of poor health and safety performance.

Bill Callaghan, Chair of the Health and Safety Commission (HSC),said: "Poor health and safety performance is a competitiveness issue and employers who want business success cannot afford to ignore it. Work-related accidents and ill-health are costing Britain's bosses billions every year, and yet there are still too many who don't even realise how much their own firms are suffering.

"Not all of these costs are immediately apparent,which encourages ignorance and helps to create a culture of complacency. Also, many employers mistakenly believe that their insurance will cover the tab, but many policies will not cover losses such as reduced production,replacement labour and legal fees. The ready reckoner highlights the many factors that can send the bill rocketing – and gives sound advice to those who want to prevent it doing so."

The HSC's small business representative, Commissioner Judith Donovan CBE,said: "Small firms are often operating on tight margins. They may not have experienced many accidents or cases of ill health, but when they do these can often have a disproportionate impact on the business. Small firms often have little cushion against these costs,and as the leaflet and web site make clear, insurance policies may not cover the bill."

The leaflet includes three simple ways to estimate what accidents may be costing firms each year, and an easy-to-use form to record the costs of an incident so employers can work out for themselves the real cost to their organisation.

The ready reckoner web site has been designed to be a mine of information on the costs of work-related accidents and ill health. As well as providing further information on the subject, it has:interactive calculators to help organisations better estimate the costs of injuries and ill health; an interactive form to record the costs of incidents; case study material illustrating the economic and business impact of accidents and ill health; and a facility for users to send information to HSE for inclusion on the web site.

The HSC welcomes feedback on the web site and there is an online facility which means this can be done very easily. The Commission also intends to expand the web site over the next year and would particularly welcome organisations that carry out their own research on the cost of accidents and ill-health to share the results. The best examples of good practice will be used on the web site, subject to the exemplar's prior consent.

MORE INFORMATION

The ready reckoner comes both as a free leaflet and as an interactive web site. Web: www.hse.gov.uk/costs. Copies of Reduce risks – cut costs: the real costs of accidents and ill-health at work are available from HSE Books, PO Box 1999, Sudbury, Suffolk, C010 2WA. Tel: 01787 881165. Fax: 01787 313995. Web: www.hsebooks.co.uk

FOOD STANDARDS

New edition of BRC Food Standard

Retailers are now selling more of their own branded goods,and these sales represent more than 50% of all food sold in the UK. The Food Safety Act 1990 placed a series of obligations on retailers to ensure the highest possible standards.

Own brand food has always been the subject of high production and hygiene standards, but in the past many retailers undertook inspection of these standards separately. In order to help retailers to meet these legal standards and to protect the consumer, as well as compliment their own inspection arrangements, the British Retail Consortium (BRC) developed a Technical Standard to form a common basis by which own brand suppliers will be certified.

The BRC are delighted to announce the publication of the new third edition of the BRC Technical Standard for Companies Supplying Retailer Branded Food Products. The updated Standard has sought to:

- improve particular clauses in the Standard, in response to feedback from manufacturers and inspection bodies
- move from an inspection-based Standard (EN45004) to a certification-based Standard (EN45011)
- ensure that the Standard meets the requirements of the Global Food Safety Initiative.

Following BRC meetings with stakeholders, timescales and a conversion process to implement the third edition has been agreed,phasing out the second edition by 31 August 2002.

Alongside the launch of the new Standard, the BRC has developed a series of food sector technical training courses, to complement its globally recognised range of BRC Food, Genetically Modified Organisms (GMO) and Packaging Standards.

Our First and Third Party Auditing Courses aim to provide internal and certification body auditors with an understanding of auditing requirements against the BRC Standard. Awareness Training courses have been designed to enable delegates to implement the BRC Food,GMO and Packaging Standards, so that their systems comply with the specified requirements. Hazard Analysis Critical Control Point (HACCP) training is now also available to respond to popular demand,and bespoke courses suiting your individual needs can be designed upon request.

Jeremy Beadles,Commercial Director, British Retail Trading Limited said,"In a fast moving environment such as the food sector where consumer confidence is important,retailers are constantly striving to attain the highest standards of production and hygiene. This publication and training courses show the commitment of the BRC and member companies to achieve this for their customers."

MORE INFORMATION

Copies of the new edition of the Food Standard can be obtained from The Stationary Office. Tel: 0870 600 5522. Web: www.tso.co.uk
For further information on training courses, please contact Melanie Grange. Tel: 020 7854 8981. Email: Melanie.Grange@brc.org.uk

AWARDS

Brian Sims wins International Engineering Award

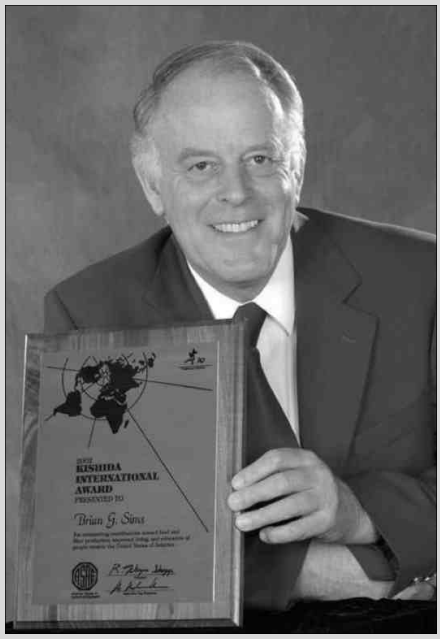

The American Society of Agricultural Engineers (ASAE) has named Brian Sims of Silsoe Research Institute (SRI) as winner of the 2002 Kishida International Award.The award honours outstanding contributions toward food and fibre production and improving the lives and education of populations outside the United States.The award was presented to Brian on 31 July 2002 during the ASAE-CIGR Congress Annual International Meeting in Chicago.

The selection committee chose Brian Sims for the award in recognition of his outstanding contributions and achievements in the application of agricultural engineering to global mechanisation and education.His leadership, personal interaction and creativity have brought numerous international programmes to life for small-scale farmers around the world.

Brian is head of the International Development Group at SRI.Much of his work has involved advising Latin American governments on the preparation,management, evaluation and technical appraisal of agricultural development programmes. He has proven the benefits of the 'participatory technology development' method,which combines knowledge and observations of small farmers with agricultural engineering principles,resulting in effective and easily adoptable programmes.

He has established agricultural engineering units in various Latin American countries such as Ecuador, Mexico, Chile and Bolivia and his other areas of expertise include technology transfer of farm mechanisation, soil and water engineering and crop production techniques especially associated with animal-drawn implements.His efforts have resulted in improved food production and living conditions for countless people.

Brian has authored or co-authored more than 100 refereed publications and six books and has taught courses on design,testing and evaluation of agricultural machinery, sustainable hillside agriculture and agroforestry. He is a member of the ASAE, the Institution of Agricultural Engineers and Asian Association for Agricultural Engineering.

Bimonthly AUTUMN 2002

MEMBERSHIP MATTERS

THE NEWSLETTER OF THE INSTITUTION OF AGRICULTURAL ENGINEERS

PRESIDENTIAL PROGRESSION

It is with mixed feelings that I retire as President of the Institution. On the one hand I feel that I could have done much more but time has been a particularly valuable commodity these last two years as I have had the busiest time of my business life concurrent with my presidency. However, I am assured that most Presidents relinquishing their post feel the same. On the other hand, however, I feel we have, in fact, achieved quite a lot.

One colleague said I had accepted the 'poisoned chalice' when I took the job. He said, 'the Institution is on the slide and you could be left holding it in its final demise'. I disagreed with his pessimism but agreed with his assessment of the Institution's situation. Numbers had been dropping for a number of years and even although we knew the reasons, the solution was not obvious. Fortunately, Dick Godwin had held a workshop on rejuvenating the Institution 4 years prior, so we had some pointers on the way to go.

We decided that, above all, numbers were important. We needed somewhere near 2000 members in order to appear truly representative of Engineers in the countryside and also to be able to afford the services which our members had come to expect. The staff had made many miraculous savings to enable us to operate at the lower budget but whereas we had thought we could not operate below 2000 members, we were now sure we could never manage on less than 1500, unless the basic service was cut.

The main problems were as follows.

- Our traditional market for members was being depleted by early retirements and a shrinking core industry.
- On the other hand, we had many members working in other branches of rural engineering and these must be valuable targets for new members.
- When we looked at what we had to offer, we felt we needed to update our image before entering into a major sales campaign.
- We needed to study the market in the wider countryside activities and seek out other groups of professionals who may be looking for a home or indeed would benefit from a liaison with IAgrE.
- We needed to be able to offer prospective and current members the full professional service, including the right to award and maintain the highest professional qualification of CEng.
- We needed a few more influential members who would take an active interest in the Institution and encourage their colleagues to join.
- We needed to increase our student membership from 4% of membership to 10%.

These were the challenges when I took over and we have made progress in tackling them by:

- appointing a competent CEO who understands the industry and who will directly approach Companies and individuals to encourage them to join as well as increase the professionalism in the HQ administration;
- appointing a researcher to look at the market and provide us with a database of prospective members who were outwith our traditional catchment area;
- appointing a graphic designer to provide us with a new logo which has given us many opportunities to freshen our image;
- achieving accreditation at CEng level with Engineering Council;
- introducing Commercial membership and literature to launch a campaign;
- introducing an 'eminence' route to membership for very influential figureheads in our traditional industries,whether or not they had a formal engineering qualification;
- introducing free membership for 1st year students with a bargain second year if they signed a standing order;
- enhancing 'Landwards'to become a news magazine as well as our journal and increasing its frequency by 50%;
- strengthening our approach to Specialist Groups; and
- planning larger conferences.

All of this has been achieved at some cost, which the membership has wisely, in my view, endorsed. We decided about 3 years ago to invest up to £10,000 of assets in an attempt to turn the membership numbers around. This was to be withdrawn from a pot of capital of around £200,000. I considered it to be unwise to sit on such capital while the Institution deteriorated.

There are signs that things are on the turn. We have had a number of new 'eminent members' join us and we sincerely hope they will lead to recruits from within their command. The student numbers increased dramatically last year.

The name change has again reared its head with strong

views from leading members of the institution. The issue cannot be avoided as the name does not reflect the work of the majority of member's work but on the other hand a change of name could mean loss of our historical identity. This time, I propose it be handled rigorously. I would like all members to put their views forward in Landwards during a period of debate and in the very near future we should have a full referendum vote on an agreed format. One interesting view-point is to remain known simply as: 'IAgrE The Institution for Professional Engineers in .....' The last word could be Amenity, Agriculture, Forestry or any other specialism. This avoids change yet allows fresh branding.

I leave the Institution, knowing that the tools are now in place to help effect an increase in membership. Our capital finances are still sound. Our staff at Silsoe are very motivated and are some of our greatest assets. Previous staff have had the job of maintaining the smooth running of a professional institution but Chris, Elizabeth, Rachel, Wendy and Pat have had to help introduce many changes, set up systems to implement them and at the same time try to get new members – and all on a reduced budget. They have all become respected friends and I thank them on your behalf.

My final thanks go to the many committee members throughout the country. Without the help of so many, the Institution would not survive. I do know that many of them get a little buzz from the work and from the associated networking but it is small reward for the time they give. I sincerely hope that IAgrE remains a friendly home and a professional forum for all involved in the land-based industries. I leave the office in the very capable hands of Dan Mitchell who I hope will continue with the initiatives of recent years while at the same time, keeping the friendly, informal atmosphere that IAgrE has become known for. It is that which will ensure its stability, more that any other single issue.

Geoff Freedman

BILL LADBROOKE 1920–2002

Bill Ladbrooke was a member of the Institution for 51 years and his contribution to, and support and enthusiasm for, many aspects of engineering was boundless.

As a young apprentice engineer at the outbreak of the war, Bill joined the Royal Navy and by 1942 he was the first engineering officer of the Royal Marine Boom Patrol Detachment, a cover name for the Special Boat Section which specialised in clandestine operations against enemy forces in Europe and the Middle East. It has been said that Bill was a member of Winston Churchill's team at the Yalta conference in 1944.

After leaving the Navy as Lt Cdr in 1948, Bill's career took him to many parts of the world, working for Caterpillar, the World Bank and the David Brown Corporation, setting up their Industrial Tractor Division. Subsequently he became a consultant in the field of automotive and agricultural engineering.

Bill was also an active and respected long-serving member of the Society of Operations Engineers (incorporating the Institute of Road Transport Engineers), representing them on the Technician Engineers Board of the Engineers Registration Board, and in 1980 was elected Chairman of the ERB General Assembly.

Bill served the local branches of IRTE and IAgrE with untiring devotion. (See below for Western Branch tribute). For the last two years he had also served on the Internal Audit Panel for the Institution. He was a regular and welcome visitor to the Secretariat office.

Bill was a genial, larger-then-life character who put every effort in to all he did and he will be sadly missed.

From IAgrE Western Branch

Bill was a staunch supporter of the Western Branch both as a long term Committee member and our Treasurer.

His lifelong interest in anything with wheels and/or engines resulted in a number of interesting visits and evening meetings being arranged. On occasion, Bill took over commentary on the cars and commercial vehicles at our local steam rally, including many anecdotes that the manufacturers would have preferred not to be publicised!

Bill made the long journey from Hampshire to our far flung meeting venues on every possible occasion with only scant regard for weather conditions. We arranged a small celebration for the presentation of his last long service award where his enthusiasm and humour remained undiminished - he will be sorely missed.

Richard Robinson

NEWS OF MEMBERS

Congratulations to **William Waddilove** who has been promoted to the grade of 'Fellow' of the Institute of Scientific and Technical Communicators.

Luke Edwards who works for Mountainside Farms Co Ltd in Tanzania says that they have recently formed a joint venture farming company with Tanzania Breweries Ltd (part of South African Breweries) to grow mainly cereals on the western slopes of Mt Kilimanjaro.

SW E Butler has changed his career and moved to Oman. He is now working for the Royal Airforce of Oman, with the rank of Warrant Officer. He is an engineering instructor at the Airforce Technical College where he teaches basic engineering skills and aerodynamics to airforce trainees. This move came about as a result of becoming interested in aviation, after gaining his Private Pilot's licence in 1996. He left Rycotewood College in 1998 and went to City University in London where he started a degree in Aerospace engineering, but withdrew after the first year as he was finding it a struggle. He then did a Higher National Diploma course at Farnborough College and graduated as best student on both the first and second years. As he was unemployed at the end of the course in June 2001, a friend suggested that he should write to the military attaché's office for Oman and was offered a job. He would be pleased to hear from any members who know him and he can contacted at: PO Box 2153, CPO SEEB, Postal Code 111, Sultanate of Oman. E-mail: tayyarsb@omantel.net.om

Warren Legg has returned to Zambia to take up a job with an irrigation company based in Lusaka. He will be involved in designing and installing systems all over the country.

Tony Chestne

Write to Tony with your news!
His address is: 32 Beverley Crescent, Bedford MK40 4BY

STRATEGIC PLANNING

The President Dan Mitchell (centre front) with the Immediate Past President Geoff Freedman (front right) and with (from left to right) Past Presidents John Fox, Douglas Walker, John Weeks, Brian Witney, Dick Godwin, Brian Legg and Brian Finney gathering for IAgrE policy discussions in June at Wrest Park.

Discussion topics covered at the meeting in June included the following.

• Dan Mitchell outlined the three key points of his strategy for his Presidency

> Student Membership
> Eminent Members
> Press & Public Relations

These were agreed to be vital in raising the profile of the Institution and expanding membership throughout all areas of the industry. The support of the Douglas Bomford Trust in subsidising student membership was acknowledged.

The President requested that the Past Presidents should advise him or the Secretariat of any suitable candidates for admission by the Eminence route.

• Publicity material

Post-card sized publicity material (based on that used for 'Faster by Design') is to be printed. These will be able to be used in a variety of ways – requests for membership information, conference publicity etc.

• Some discussion took place as to what members want from the Institution.

As attendance at Branch meetings is very low and interest in the journal not believed to be significant, the main advantage of membership is seen to be 'networking'. Ways in which this can be further provided could include the following.

> Development of website
> Interactive networking – 'conference with no speakers'?
> Information service – 'two phone calls to find out anything'?

• IAgrE to be approached for 'expert opinion'

• Failure to sell IAgrE

To attract more revenue, say advertising, it is essential to get through to the end user.

• Broadening catchment

If IAgrE is to look beyond the traditional Ag-Eng community, must broaden catchment and appeal. The areas of Amenity and Environment have not yet been fully developed. Environment is a very broad remit, and a 'champion' would need to be identified. However, Amenity could be more readily targeted as some links are already in place.

• Possible International Amenity conference – Sports Surface Technology

It was agreed that this area could be suitable for focus, particularly with the links being developed through Cranfield University's Sports Surface MSc to Institute of Groundsmen, etc. Having the key contacts is vital – BIGGA, Independent Sports Surface Association, AEA Outdoor Power Section (ground care co's listing), SALTEX, Turftrax (Richard Earl – Eng Director), Aberystwyth University

• Sports & Amenity Engineering Group?

Special Interest Group (SIG) could be launched at Amenity Conference? However, IAgrE must be able to offer something to potential members in this area. Articles in Landwards – may need to be paid for initially?

• Funding to support conference and launch SIG

It was suggested that a proposal to Council to underwrite this initiative to the sum of £ 10,000 could be made. If IAgrE was seen to be committing funds sponsors more likely to also commit. Releasing money to invest in the future is vital.

YOUNG ENGINEERS

The annual 'Young Engineer's Evening' took place at Writtle College, with 9 final year students taking part. For those not familiar with this event, all the students are asked to present a poster, and explain the findings, of their projects to small groups of IAgrE judges (including some ex-students!) drawn from branch members.

This year there was an interesting mix of projects to judge. They ranged from a study to look at compaction under a John Deere four-wheel drive versus a track system, and a project investigating the labour difficulties and operating costs involved in a lettuce harvesting rig. All of the students had clearly gone to a lot of effort in preparing their displays, and the explanations given during the evening were very professional. Some of the students had also taken the trouble to dress in a suit which must have stood them in good stead.

After a lengthy debate between the judges, admirably led and controlled by the chairman, Martin Holden (of Hayters), a final decision was reached.

Two projects were 'highly commended' and these were awarded a certificate duly signed by the chairman and secretary.

• **Sam Hosack** with his work on precision irrigation; and

• **Stuart Graham** and a project with his previous sandwich employer, Richard Western Trailers, which investigated weeding techniques.

The top prize, 'The Brian Scantlebury Award', (awarded in remembrance of our late committee member and founder of the branch), together with a certificate, were presented by Jean Scantlebury, to **Barnaby ('Barney') Lewis**. His project was on the effect of jetting angle on the draught forces of underwater cable laying tines. This had included work undertaken at Silsoe College.

The evening was rounded off with a thankyou offered to all the participants for what had been a most informative and entertaining evening.

Richard W Langley

THE ESSENTIAL ELECTRONIC AGRICULTURAL LIBRARY

The Essential Electronic Agricultural Library (TEEAL) is a project that has transformed people's live all over the world. TEEAL is the result of a remarkable collaboration; thanks to the generosity of the Rockefeller Foundation and participating publishers, it is making the best scientific journals affordable to the developing world. In 1997, ***The Institution of Agricultural Engineers*** officially joined TEEAL's effort by allowing the use of Landwards.

The annually updated CD-ROMs contain more than 1.5 million pages of literature – every page, diagram, and photograph from journals covering a range of topics including:

- Agricultural Engineering
- Animal Management
- Crop Development
- Economics
- Environment
- Food Processing
- Forestry
- Natural Resources
- Nutrition
- Pest Control
- Range Management
- Rural Development
- Soil Science
- Sustainable Agriculture
- Veterinary Medicine

To date, sixty-two institutions in thirty-two countries are using TEEAL. The response from these institutions has been overwhelmingly positive. In many cases, purchasing libraries saw their collection jump from zero to 140 journals, with the arrival of their TEEAL set. Researchers suddenly found themselves with a wealth of accessible resources unimaginable in pre-TEEAL days – resources that have had an immediate impact on their work. One user, Steve Afolami, a senior lecturer at the University of Agriculture, Abeokuta, Nigeria, says: "I was working on a manuscript before TEEAL came. After searching the literature with TEEAL, I completely discarded the original draft and started afresh on the manuscript. I am sure TEEAL will improve the quality of our teaching and research."

The Rockefeller Foundation have recently asked TEEAL staff to investigate readiness for an Internet version of TEEAL. A survey of all current TEEAL users has been conducted and whilst there are differences in connectivity across the developing countries, there is great interest in moving forward to develop an 'Online TEEAL'. Survey results show that institutions in Africa have the poorest Internet connectivity, and users recommend that the CD-ROM system is maintained, even as the online system is planned.

TEEAL recognises that access to the world's most important scholarship – the World Health Organisation's Health InterNetwork Access to Research Initiative (HINARI) – is essential for progress in the developing countries. Key international organisations, such as the World Health Organisation and others, play an important role in reaching out to the international agricultural community. TEEAL hope to partner with these organisations when planning discussions with contributing publishers about creating a similar scholarship system for agricultural and environmental journals.

The outgoing Chairman of Southern Branch, Jeff Beck (centre) following the presentation of bouquets by Mrs Beck (left) to Anne Statham for supporting the Hon Secretary and Treasurer Oliver Statham (right) and to the President's representative Steve Parkin for his wife who was indisposed and unable to accompany him to the AGM and Dinner as intended.

MEMBERSHIP CHANGES

Admissions

Fellow

V J Croxson (Cheshire)
V A Dodd (Ireland)
R G Humphrey (Buckinghamshire)
V W L Jordan (Cheshire)
W Stephens (Bedford)
D-W Sun (Ireland)

Member

B G Knight (Rutland)
R N Lawton (Wiltshire)
P D Smith (Ynys Môn)

Associate Member

C C Britner (Lincolnshire)
M L Butler (East Sussex)
D A Feely (Rutland)
N R Hardie (Scottish Borders)
R D Jones (Leicester)
K J R Payne (Herefordshire)
D R Shankland (Ayrshire)
J Vater (Carmarthen)

Associate

A O Adenuga (Nigeria)
H W Henderson (Bedfordshire)
A G Hodgekiss (West Sussex)
B B Q Lewis (Essex)
N A MacRae (Gloucestershire)
T A Mold (Warwickshire)
C L W Szabo (North Lincolnshire)

Student

T E Ashton (Somerset)

Readmission

C M Johnson (Cheshire)

Deaths

T H Hoppe (West Sussex)
R W Ladbrooke (Dorset)

Transfers

Associate Member
T D Jewers (Suffolk)
J R Spurgeon (Lancashire)

Produced by: Land Technology Ltd, Edinburgh Printed by: Barr Printers, Glenrothes

INSTITUTION of AGRICULTURAL ENGINEERS, WEST END ROAD, SILSOE, BEDFORD, MK45 4DU, UNITED KINGDOM. Tel: 01525 861096 Fax: 01525 861660

Access all areas

The third in the series of early evening seminars was held at the impressive headquarters of the ICE in Great George Street, London in May. 'Access all areas – Rural access, travel and mobility in developing countries and the footpaths, tracks and roads that make it possible', was organised jointly on behalf of the Institutions of Civil Engineers (ICE), the Institution of Agricultural Engineers (IAgrE) and the Tropical Agriculture Association (TAA). Some 50 participants (sadly only three from the IAgrE) were welcomed to the seminar by Peter Cameron chairman of the ICE Appropriate Development Panel (ADP), our hosts for the evening.

The chairman for the event was Colin Ellis, a Senior Engineering and Transport Adviser at the Department for International Development (DFID) who had returned that morning from a World Roads Association (PIARC) conference in Cambodia on rural transport. In his introduction Mr Ellis highlighted the importance of improving decision-making in the rural transport sector in developing countries. There had been considerable recent research and development work on rural access, intermediate means of transport, alternative road construction methods and related issues. However effective means of incorporating the considerable knowledge on such issues into the decision making process were often lacking. Also more needs to be done in devolving the decision making process down to local authorities in the communities that will be affected by any interventions.

Donors have in the past often concentrated on project level funding which has resulted in considerable distortions and imbalances in the effectiveness of rural transport networks as a whole. The current trend is to take a more holistic, integrated view and provide sectoral support in order to get a better balance between all parts of the transport system.

> 'It was as usual an enjoyable and thought provoking evening providing a rare opportunity to share with fellow engineers from other institutions and rural development specialists'

The movement of people and goods may be essential to economic development but personal mobility may also be considered as a human right and thus in some situations be provided as a social service.

Rural transport – Peter Crossley

The first speaker, Dr Peter Crossley (c.p.crossley@cranfield.ac.uk) from Cranfield University, touched on a wide range of issues, in the provision of rural transport in developing countries. He presented fascinating data from research on tyre/surface characteristics; vehicle performance modelling; local manufacture of rural transport vehicles; earth road maintenance and the role of transport in development aid and emergency relief.

Dr Crossley demonstrated the importance of recording and understanding the full significance of vehicle performance and operating costs including road factors such as rolling resistance, traction, gradient, curvature and roughness and vehicle factors such as fuel costs, repairs, maintenance and depreciation. However, the focus of his presentation was a recent research project, funded by DFID, on the role of small-medium enterprises (SMEs), in the provision of rural transport services in sub-Saharan Africa.

The project considered issues such as the effects of rural transport services of all types (buses, large and small trucks, taxis, bicycles, animal carts and other low-technology vehicles) on the quality of life. It found that the poorest rural people often suffer from the lowest availability of reliable and affordable transport services. The project also looked at demand/supply issues in the provision of vehicles and locally produced Intermediate Means of Transport (IMTs) and found that low levels of disposable income in many areas was a major constraint. This research has also highlighted the importance of improving the management, business and technical skills of rural transport SMEs in many countries in sub-Saharan Africa as well as improving their attitudes towards customers.

A two-volume handbook has been produced on the role of SMEs in rural transport services, details of which will be available through the World Bank (www.worldbank.com) or Derek Sutton (derek.sutton@dial.pipex.com).

Sustainable trails – Andrew Carling

The next speaker, Andrew Carling (www.sustainabletrails.org)

an international specialist in sustainable footpath and trail management, also highlighted the particular transport and mobility problems for the poorest people in rural areas.

Mr Carling neatly summed up the importance of trails and paths for the poorest and most marginalized communities by emphasising that any rural transport strategy should recognise that people in these communities have only two options for travel – the left leg and the right leg! He described how he had used his many years of experience in footpath construction and maintenance on the Cumbrian fells to assist isolated villages in Tanzania to improve their mobility and access to services such as schools, markets and hospitals.

Mr Carling went told a moving story of how with minimal capital expenditure (£15!) but a great deal of patience and tact he had achieved the full and enthusiastic involvement of the local villagers. Also, how together they had carried out improvements to footpaths and trails linking remote villages at the top of the Rift Valley to larger villages with schools, markets and hospital facilities lower down the escarpment. He showed examples of the techniques he uses and commented on the possible negative effects that can occur when improved access roads and transport facilities reach hitherto isolated communities resulting in more rapid wear and tear on local footpath infrastructure. Mr Carling emphasised the importance of using indigenous knowledge, fully involving local people in the process and commented on the similarities in footpath construction methods throughout the world while also highlighting the value of using well tried and tested, sometimes ancient, methods. These have often been proven to withstand not only the normal wear and tear from people's footsteps, barrows and bicycles but also the onslaught from the elements and other natural disasters.

Mr Carling concluded by re-emphasising the importance of making full provision for sustainable tracks and trails in any rural transport development planning process.

Rural infrastructure – Kenneth Mukura

Kenneth Mukura (kmukura@trl.co.uk), the third speaker, continued the theme of developing rural infrastructure for access and mobility with an absorbing presentation based on his many years of experience as a road engineer in Zimbabwe.

Mr Mukura reiterated the crucial importance of adequate access and mobility in rural areas in order to tackle the serious problems of extreme poverty and deprivation facing so many developing countries. The essential need to provide and maintain these facilities at minimal cost because of severe budgetary constraints. He emphasised the importance of integrated, holistic thinking and planning taking account of the fact that a new road or track is of little benefit without the appropriate means of transport (vehicles, carts, bicycles, etc) to use it. The importance of long-term sustainable solutions and the considerable advantages of using low tech methods, labour based techniques and locally available materials where appropriate and delegating management responsibility and authority to the local level.

Mr Mukura concluded with a video of road development in Zimbabwe and a heartfelt plea, for all the national and international individuals and institutions involved in developing better rural access, to work much more closely together to avoid the many problems being experienced from uncoordinated efforts.

Points for discussion

A lively discussion followed and continued after the meeting in the pleasant ICE Headquarters bar!

Do come along next time! It was as usual an enjoyable and thought provoking evening providing a rare opportunity to share with fellow engineers from other institutions, rural development specialists' and agriculturalists' insights into fascinating topics we perhaps know little about.

Next meeting

Details of the next joint meeting will be available in due course. Register with Ruth Dennett at the ICE (ruth.dennett@ice.org.uk) to receive details of these and other ICE Appropriate Development Panel (ADP) events. For details of other events, contact the Institution of Agricultural Engineers (IAgrE) at www.iagre.org, or the Tropical Agriculture Association (TAA) at www.taa.org.uk.

Derek Sutton

WILDLIFE

Sustaining England's woodlands - your responses

An analysis of the responses to the Sustaining England's Woodlands consultation paper is published today by the Forestry Commission,on behalf of the review's Steering Group. The Steering Group asked for views on how the Forestry Commission should support the sustainable management of woodlands in England.

The responses varied widely and there was no outstanding single dominant issue. However, there was strong support for the following:

- Forestry Commission to take a leading advocacy role in promoting to the rest of government and the public the multiple benefits of good woodland management;
- more grant support for existing woodland management compared with support for new planting;
- more advice and assistance to woodland owners (the expertise of FC woodland officers was highly valued);
- more advice on and better targeted grants for environmental sustainability;
- Forestry Commission to play a greater role in partnerships;
- more focus on the development of markets for woodland products.

The public consultation on how the Forestry Commission might best support the sustainable management of woodland in England ran from October 2001 to January 2002.Nearly 400 responses were received from a wide range of organisations and individuals.The analysis of those responses has formed an important part of the evidence used by the Steering Group in formulating its recommendations.

The Steering Group's recommendations will soon be presented to Forestry Commissioners,and will be published,together with the Government's response, later in the year.

GASEOUS COMPOSITION FOR CROPS POSTHARVEST

Chris Bishop

Introduction

The increasing pressure to reduce chemical usage, but to have fresh produce available all the year round has meant that 'physical rather than chemical' solutions are being increasingly investigated often by people whose experience and training is biological or chemical rather than engineering. It may well be that progress would be faster if engineers were involved.

One of the most important areas that has been considered is the gaseous composition of the atmosphere around the fresh produce. Normally the gases considered are carbon dioxide, oxygen and nitrogen.

There are a number of reasons why altering the gaseous composition of the atmosphere may be of benefit, namely:

- prolonging the shelf life
- disease control
- maintaining 'freshness'
- disinfestation

The gaseous manipulation may be by regularly monitoring and altering the gas concentration to the desired level which is called Controlled Atmosphere (CA). Alternatively, the manipulation may be by placing the produce in a container of known gaseous permeability so that the respiration of the product forms an uniform gas concentration, which is called Modified Atmosphere (MA) and is not as precise as CA. This MA may be given a 'start' by blowing nitrogen or carbon dioxide into the container as it is filled, known as 'flushing'.

BIO NOTE

This paper was presented at the IAgrE Annual Conference entitled 'Faster by Design' and held at Harper Adams University College on 15 May 2002. Dr Chris Bishop MIAgrE is a Reader in Postharvest Technology at the Department of Science & Technology, Writtle College, Lordship Road, Writtle, Essex, CM1 3RR. Tel: 01245 424200 Fax: 01245 420456 E-mail: CFHB@writtle.ac.uk

Extending shelf life

All fresh produce respires all the time so that carbohydrate within the product reacts with oxygen to produce carbon dioxide, water vapour and heat.

$$C_6H_{12}O_6 + 6O_2 = 6CO_2 + 6H_2O + \text{heat}$$

The rate at which this reaction occurs may be very slow with products like grain or nuts or it may be more than 100 times faster with products such as fine beans or broccoli. The rate of respiration for a healthy sample of a specific product depends primarily on the temperature. However, there is always a minimum temperature below which the product will freeze or experience chilling injury so to reduce respiration further, to extend shelf life, the availability of oxygen should also be reduced.

Recent developments

Apart from the CA storage of apples and pears there is now increasing quantities of other crops, such as asparagus,being stored with CA (Peppelenbos & van 't Leven ,1995). In some cases the storage period has been prolonged with CA although in some cases it is as much that the product tastes 'fresher' which is very difficult to evaluate. As with apples and pears, the characteristics required for different cultivars may be different. The CA 'store'may be a building or a ship container and an increasing number of CA containers are being used in moving produce around the globe.

Fig. 1 Green or spring onions transported by air, top; in modified atmosphere (MA) bag by sea, bottom (Photo: Packaging and Technology Ltd)

Modified atmosphere for bulk

Although the use of modified atmosphere in retail packs was introduced a while ago the use of modified atmosphere for larger units is still relatively new. There have been different ways that 'bulk' MA has been approached. It is normally with a whole '40 foot' ship container, or with an 'envelope' over a pallet load or within a bulk box. Figure 1 shows green or spring onions from Egypt and Mexico and is used as an example of how the technology changes economics and growing patterns. Three years ago, spring onions had to be transported as airfreight, with top ice, into Northern Europe during the winter months. Following the development of a 8 kg MA bag with which

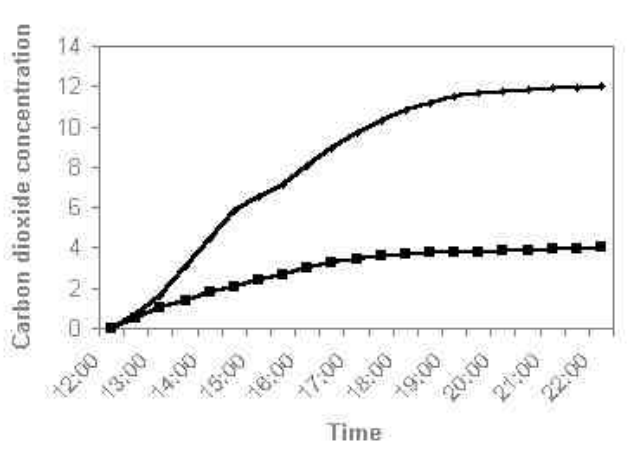

Fig.2 The development of carbon dioxide concentration within two bags made of different permeability films. Steady state has been achieved in both cases.

Writtle College was involved, the onions can now be sea freighted at approximately 20% of the cost. This has resulted in an increase of demand and Egypt and Mexico have been able to increase their exports.

There is a great deal of interest in this method for a whole series of products.

Disinfestation

With the increasing pressure to avoid using agrochemicals, in particular methyl bromide, there is interest in other methods of disinfestation. The use of reducing oxygen to kill insects is being researched. It is important to know what pest is being targeted and whether it is the insect or the egg. The latter is much more difficult to kill. Time is one factor that has so far been against CA disinfestation although this may offer possibilities during transport. Some cases have shown that a combined temperature and CA may be best.

There have been very positive results with table grapes. It was shown that at 45% carbon dioxide and a temperature of 5oC (as opposed to 0oC normally) for 10 days, produced a 100% kill at all life stages for pests of economic concern (Anon,2002). However the hurdle may be legislation and whether certain receiving countries can have confidence in a non-chemical method.

Disease control

Certain diseases do not grow in high concentrations of certain gases, for instance botrytis on strawberries can be contained by 15% CO2 (Hertog et al., 1999). Figures 3 and 4 show two samples of strawberries (cv Elsanta) that were from the same plants and harvested on the same day but one is in a MA pack and the other open to air.

This fact is being used both on the micro and macro scale. At present much of the interest is with crops such as grapes where there is increasing pressure to move away from the use of sulphur dioxide fumigation or pads.

High oxygen concentration

There has been some work in investigating the possible use of high concentrations (70%+) of oxygen to prolong shelf life without the possibility of anaerobic taints. However, the results to date have been variable with high oxygen concentrations increasing, decreasing or having no effect on respiration rate (Kader & Ben-Yehoshua,2000). High oxygen is used in red meat retail packs to maintain the colour.

Conclusion

There has been considerable development in the last 15 years in the use of gas concentrations, but there is still much to be done perhaps in conjunction with heat treatment, hypobaric treatment or closer temperature control in the cool chain. There are many challenges for the engineer as part of a multidisciplinary team.

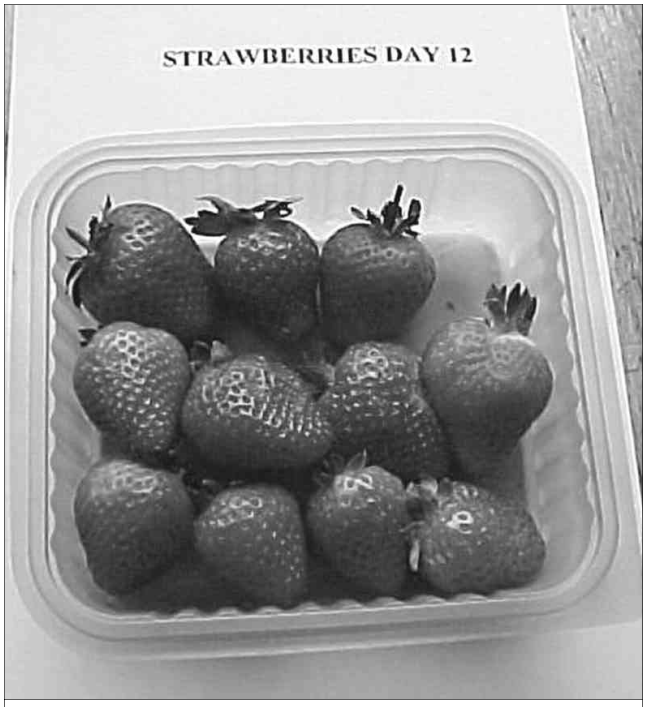

Fig. 3 Strawberries (cv Elsanta) 12 days after harvest and packing in a MA pack

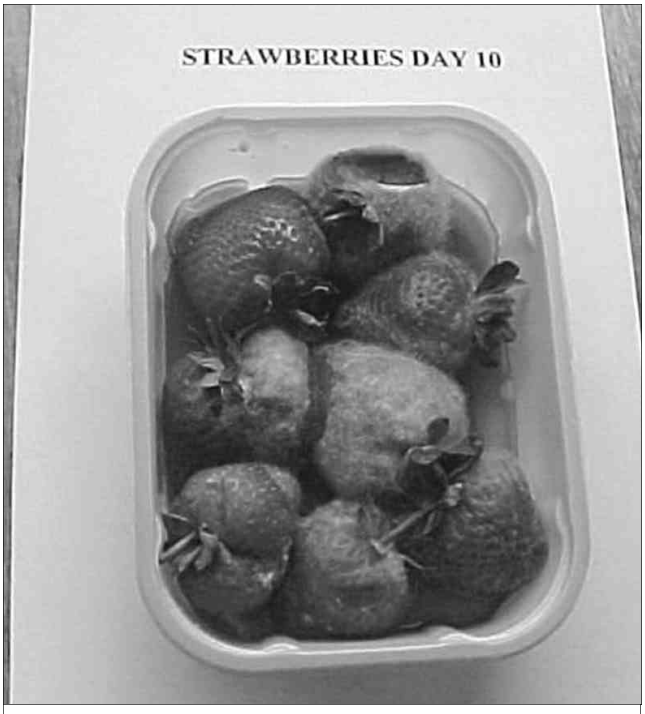

Fig. 4. Strawberries (cv Elsanta) open to the air, 10 days after harvest and packing; note the botrytis on the berries

References

Anon.
Use of controlled atmospheres as a quarantine treatment for table grapes http://www.epa.gov/spdpublc/mbtr/grapeca3.html (Accessed 18/4/02)

Hertog M.L.A.T.M.,H.A.M. Boerrigter, G.J.P.M. van den Boogaard,L.M.M.Tijskens and A.C.R. van Schaik (1999).
Predicting keeping quality of strawberries (cv 'Elsanta') packed under modified atmospheres: an integrated model approach. Postharvest Biology and Technology, 15 (1), 1-12

Kader A.A.and S Ben-Yehoshua (2000).
Effects of superatmospheric oxygen level on postharvest physiology and quality of fresh fruits and vegetables. Postharvest Biology and Technology, 20, 1-13

Peppelenbos H.W. and J. van 't Leven (1995).
Evaluation of four types of inhibition for modelling the influence of carbon dioxide on oxygen consumption of fruits and vegetables. Postharvest Biology and Technology, 7 (1-2), 27-40

MEMBERSHIPS

Commercial Members

Autec Design Ltd
Stockley Road
Heddington
Calne
Wiltshire
SN11 0PS

Douglas Bomford Trust
16 The Oaks
Silsoe
Bedford
MK45 4EL

Bomford Turner Limited
Salford Priors
Evesham
Worcestershire
WR11 5SW

John Deere Ltd
Harby Road
Langar
Nottinghamshire
NG13 9HT

FEC Services
NAC
Stoneleigh Park
Kenilworth
Warwickshire
CV8 2LS

G C Professional Services for land-based and related industries
Highdown Cottage
Compton Down
Winchester
Hampshire
SO21 2AP

Law-Denis Engineering Ltd
Millstream Works
Station Road
Wickwar
Wotton-under-Edge
Gloucestershire
GL12 8NB

David Ritchie (Implements) Ltd
Carseview Road
Suttieside
Forfar
Angus
DD8 3EE

Rotomation Ltd
Summerwood Lane
Halsall
Ormskirk
Lancashire
L39 8RH

White Horse Contractors Ltd
Lodge Hill
Abingdon
Oxfordshire
OX14 2JD

Academic Members

Askham Bryan College
Askham Bryan
York
YO23 3FR

Cranfield University
Silsoe
Bedford
MK45 4DT

Duchy College
Rosewarne
Camborne
Cornwall
TR14 0AB

Harper Adams University College
Newport
Shropshire
TF10 8NB

Myerscough College
Myerscough Hall
Bilsborrow
Preston
Lancashire
PR3 0RY

Oatridge Agricultural College
Ecclesmachan
Broxburn
West Lothian
EH52 6NH

Pencoed College
Pencoed
Bridgend
CF35 5LG

Reaseheath College
Reaseheath
Nantwich
Cheshire
CW5 6DF

Sparsholt College
Sparsholt
Winchester
Hampshire
SO21 2NF

Wiltshire College - Lackham
Lacock
Chippenham
Wiltshire
SN15 2NY

Writtle College
Chelmsford
Essex
CM1 3RR

Book Reviews

The Illustrated Directory of Tractors
By Peter Henshaw
Chrysalis Books plc, London
Price:£8.99 paperback
ISBN 1 84065 3744

This book, to coin a phrase, 'does exactly what it says on the tin'. Using over 280 colour photographs and covering early mechanization to the current day, this is indeed a well illustrated directory of tractors.

Dealt with in alphabetical order each tractor make has between one and two pages devoted to it.Included in each entry are details of the engine power, transmission and speeds.There is also a "potted" history and anecdotes to enhance the understanding of the machine, its background and development:an example being the influence of Enzo Ferrari on Snr. Lamborghini to move from tractor to car manufacture.

As an illustrated directory it is very well presented,the photos all of good quality and potted history of interest.It will be interesting to those who enjoy flicking back through history.

In its 420 pages over 265 tractor types are detailed,from Advanced Rumley (E-type) to Zetor. Enthusiasts enjoy !

M J Hann

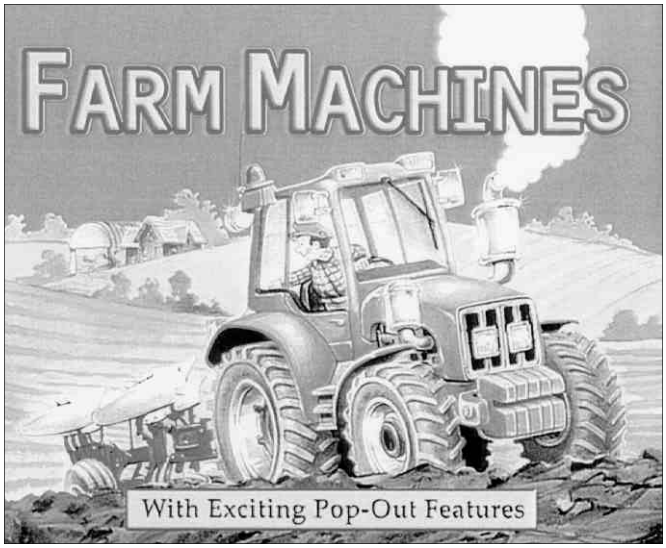

VERY Young Engineers Farm Machines
By Philippa Jackaman
Illustrator: Dud Mosely
Bookmart Ltd,Enderby
Price:£9.99 hardback 12pp
ISBN 1 84322 046 6

This fascinating pop-up picture book in full colour throughout will excite young minds eager to learn about farm machines.

The job of each farm machine is clearly explained alongside every amazing pop-up model.Children will be absorbed by the impressive fold-out, pop-up farmyard which provides the perfect setting for imaginative play. Mature Agricultural Engineers can check the technical specification of the equipment, the artwork and the origama.

Test driven and highly recommended by the Editor as a junior companion to Landwards.Target market:ages 2+ and their gift givers. Make an early start to your Christmas purchases and to engineering recruitment!

B D Witney

Effect of mechanical vibrations on human beings
Part 1:Whole-body
Part 2: Hand-arm vibration
Publisher:VDI,The Association of Engineers,Price:Pt 1,EUR 61.50;Pt 2,EUR 58.40

Published in German and English versionsDistributors: Beuth Verlag GmbH, 10772 Berlin
Tel.: ++49(0)30 2601 – 2260;
fax: ++49(0)30 2601 – 1260;
email: postmaster@beuth.de

Guideline VDI 2057 Part 1 describes the exposure-related load and strain on the human being arising from the effect of mechanical whole-body vibration and also presents methods of measuring, weighting and evaluating it.The guideline includes appendices with instructions and examples of application.This completely revised version replaces the 1987 edition and incorporates new findings about vibration-related stress. It replaces those parts of the preceding guideline which dealt with whole-body vibration,namely VDI 2057 Parts 1 to 4.

The principle new additions to the content are ISO 2631-1:1997, new frequency weighting filters,the use of the root-mean-square of the frequency-weighted acceleration,the dependence on duration of exposure and its effect on health and grouping of vibrations into several directions. Other evaluation methods as per ISO 2361-1:1997 in the case of extremely high vibratory acceleration values or very short exposure times and the calculation of a total lifetime dose belong also to the guideline.

The aim of VDI 2057, Part 2 is to present the current state of knowledge and also the universally valid basic principles applying to the evaluation of vibration exposure to hand-transmitted vibration as part of an assessment of risk in the workplace. In line with the international standards, only the frequency-weighted vibratory acceleration is now used as the exposure variable characterising vibration exposure.

Both for osteo-articular diseases of the hand-arm system and also for circulatory disturbances of the hands,two stages have been defined for estimating the health risk.

• *Daily vibration exposure (as a basis for preventive measures).* The assessment variable is now the vibration total value (vector quantity) in conjunction with the daily exposure duration.

• *Vibration exposure incurred over a period of years and which can lead to chronic disorders.* The assessment variable for osteo-articular diseases is the assessment acceleration in the forearm direction on the basis of the number of years of exposure. As regards circulatory disturbances, the relationship between the daily vibration exposure (application of the vector quantity) and the number of years of exposure should be taken into account, in agreement with DIN EN ISO 5349-1.

WILDLIFE

Woodland bird numbers count

A major new survey to discover why woodland bird numbers are showing downward trends has been set up by the Woodland Bird Group led by the Forestry Commission in a partnership of specialists from 14 organisations.

The 'Quality of Life' indicator shows woodland bird populations falling by 20 per cent among 33 species in the last 25 years. Some of these such as the Lesser Spotted Woodpecker, Spotted Flycatcher and Willow Tit have declined by more than 50 per cent since the late 1960s.

Launching the survey at the Headquarters of the British Trust for Ornithology (BTO) in Thetford,Norfolk,Forestry Minister Elliot Morley said:"We don't know yet which factors are driving the change in woodland bird populations, but this important survey will help us to determine what is going on.Whilst many species are falling in numbers there are some which are actually increasing and there are marked regional differences.

"We have already made significant progress in determining the factors involved in the decline of farmland birds;it is now time to focus more attention on our woodland birds.In our mixed landscapes of small woodlands and farmland the fate of all our wild birds is interlinked.

"One reason for the decline could in part be the isolation and generally small size of our woodlands.Expanding and linking of woodlands are two key aims of the Government's England Forestry Strategy.

"It is impossible to truly measure our quality of life, but it would be tragic if in the future our children were never able to experience the full natural wonder of a woodland dawn chorus."

Richard Smithers, the Woodland Trust's UK conservation adviser, said:"We really hope the project will help people realise the degree to which our woodland wildlife is threatened by the fragmentation and isolation of the UK's woods.If we are to give our wildlife half a chance in the face of climate change, we need urgent action at a landscape scale. The recent decline in woodland-bird populations is a signal that we can't afford to ignore."

Rob Fuller, BTO's Director of Habitats Research said:"We know about the large declines in several of our woodland birds mainly because BTO volunteers started counting birds in the 1960s.At that time there were plenty of Spotted Flycatchers and Willow Tits in our woodlands but that is no longer the case. We welcome the opportunity to look again at these woods and to try to work out what has been going wrong."

Ken Smith,leading the survey for the Royal Society for the Protection of Birds (RSPB),said:"The declines in woodland birds are very worrying,particularly in the light of the downward trends in farmland birds we have already seen.The Woodland Bird Survey is a welcome opportunity to shed light on the key factors that may be involved. It is pleasing that data collected by BTO volunteers and RSPB staff over many decades can be brought together and used in this way."

The survey will look at species and their distribution on 350 mainly broadleaved woodland plots across England, Wales and part of Scotland.It will take place during both the 2003 and 2004 breeding seasons. Survey trials are being carried out this year by BTO and RSPB. Further analysis and reporting will take place in 2005.The principal funding partners are the Forestry Commission, the Department for the Environment, Food and Rural Affairs (DEFRA) and English Nature and the 4-year project will cost £600,000, involving both professional and volunteer field workers.

The results will allow trends in population declines to be more clearly determined and understood by region,landscape context, woodland size and condition.As well as mapping bird distribution within the plots a range of other measurements will be made, such as woodland habitat structure, deer impacts and grey squirrel numbers.Findings will help focus future research priorities and provide interim guidance for management and policy makers.

Wild birds are considered a good indicator of the general state of health of our wildlife and the countryside and they have been chosen as one of the Government's 15 headline indicators of progress towards sustainable development.

REGULATIONS

Wood chipper safety deadline

The Health and Safety Executive (HSE) has set a deadline of 5 December 2002 as the date by which all power-fed wood chippers must have improved standards of operator protection. After this date, inspectors coming across machines not meeting the standards given in HSE Agriculture Information Sheet (AIS) 38: Power-fed mobile wood chippers – Operator protection at infeed chutes will be taking increased levels of enforcement,including, in some instances, serving an immediate Prohibition Notice.

Two years ago, HSE undertook a review of operator protection at the infeed chutes on power-fed machines. The review found that while some designs provided better protection than others, all makes needed improvement. These improvements were discussed with UK manufacturers and suppliers during 2000, and, from 31 October of that year, manufacturers and suppliers agreed to supply new machines to the standards in AIS 38 and offer retrofit kits for the upgrading of existing units.

Neil Craig, from HSE's Agriculture and Wood Sector, said:"Wood chipper owners have had 18 months to bring their machines up to scratch. Many prudent users have already upgraded their machines, and, by setting this deadline, we hope to motivate the rest to come up to standard. Wood chippers are dangerous machines with the potential to cause horrific injuries unless fitted with the right safeguards."

AIS 38 sets out the minimum standards for these machines. Users should compare the protective measures described in the guidance with the existing measures on their machines and contact their suppliers for upgrading where necessary.

MORE INFORMATION

Copies of the free information sheet Power-fed mobile wood chippers – Operator protection at infeed chutes (AIS 38) are available from HSE Books, PO Box 1999, Sudbury, Suffolk, C010 2WA. Tel: 01787 881165. Fax: 01787 313995. Web: www.hse.qov.uk/pubns/agindex.htm

BEARINGS

INA catalogue contains over 270 pages of ready-to-fit bearings and housings

INA Bearing Company is one of the world's leading manufacturers of radial insert ball bearings and housed bearing units as illustrated in a new catalogue that runs to over 270 pages,designated Catalogue 520.

Insert bearings and housings are an extremely economical solution to the problem of how to mount a bearing. These ready-to-fit units are also very robust, and the wide range of sealing options and anti-corrosion coatings enable the bearings to operate reliably even in harsh environments.

A vast range of sizes is offered by INA to suit shaft sizes from 12 to 120 mm, depending on the style selected. Furthermore, the shaft clamping methods (either grub screws or eccentric collar) allow the bearings to be used on unmachined drawn shafts, and the spherical inserts and housings accommodate static angular shaft misalignment. These measures to ease installation help to minimise the total cost of the bearing arrangement.

Within the range of radial insert ball bearings and housed bearing units,INA offers traditional plummer block and flanged housing units with cast iron housings,cast iron take-up housings and sheet steel housings. Radial insert ball bearings are available in metric and imperial sizes with spherical or cylindrical outer surfaces. Versions with various rubber interliners can also be specified to help accommodate misalignment and absorb vibrations, while other units are designed specifically as complete roller chain idler sprocket and idler pulley units.

For operation in environments harsher than usual, combination units are available with anti-corrosion coatings and special bearings for high- and low-temperature applications.

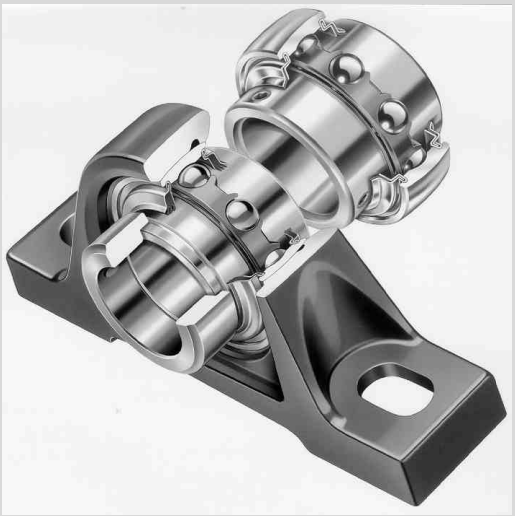

Technical details for all of these products are contained in Catalogue 520 from INA (this supersedes the previous Catalogue 517). In addition to the product data,this publication also contains background material relating to the basic principles of rolling bearing technology and information to allow the engineer to design the bearing arrangement and lubrication system. To complement the catalogue, INA offers, free of charge, a CD-Rom medias professional, which contains software routines for basic calculations of bearing life and lubrication intervals, as well as electronic drawing files that can be exported for use in CAD packages.

CONTACT

INA Bearing Company Ltd, Forge Lane, Minworth, Sutton Coldfield, West Midlands B76 1AP Tel: 0121 351 3833 Fax:0121 351 7686 E-mail: ina.bearing@uk.ina.com

HEDGECUTTER

Hedgecutters have new electric control option

A multi-lever electric control system is the latest option available on Ferri medium-sized hedgecutters for the professional user sold in the UK by Reco.

These models are already offered with either cable controls or a proportional low pressure electro-hydraulic joystick system. The new electric system provides multi-function control at a lower cost than the proportional system and also allows the operator to pre-set the speed of each function to suit his requirements.

The proportional electro-hydraulic system enables more than one function to be activated and controlled by the joystick at a time, with the speed of operation dependent simply on how far the stick is pushed in the appropriate direction.

Altogether, Reco sells 11 ranges of Ferri power arm hedgecutters. The smaller amenity and farmer ranges have cable controls as standard equipment, with the option of a simple electric on-off system as an alternative. The top of the range TKD and TKP models have proportional electro-hydraulic controls as standard.

CONTACT

Rustons Engineering Co Ltd, Brampton Road, Huntingdon, Cambridgeshire, PE18 6BQ Tel: 01480 455151 Fax: 01480 52116 E-mail: sales@reco.co.uk

SEED DRILL

Lynx Engineering enters seed drill market with the Seedline System

Growers wanting to make an economical switch to reduced cultivation and minimum tillage crop establishment techniques can do so using a new cultivator drill from Lynx Engineering. It's a new departure for the Northants-based company, which is best known for its front three-point linkage and PTO systems, cultivators and packers.

The Seedline drill uses heavy-duty spring tines to complete the process of seedbed preparation and sow seed at the same time. It is designed to cope with the surface trash left by disc or tine cultivators but will also work effectively on ploughed and pressed land,or on heavier ground that has received some intermediate cultivation.

According to Lynx Engineering managing director, Nick Ewbank,the new drill offers an economical option for growers wanting a fully mounted,high output sowing system that can cope with less than perfect seedbeds.

"The Seedline has been designed as a coulter platform for an existing pneumatic seeder," he explains. "Farmers could buy a new or second-hand seeding unit to go with the Seedline, or could convert a power harrow-drill combination by transferring the hopper, metering unit and seed tubes to the Seedline to create a new, more versatile and more economical sowing outfit."

Lynx Engineering,based at Long Buckby near Northampton,will produce two models: the 3m Seedline 24C and the 4m Seedline 32C, both tractor-mounted,with positive land-wheel drive to the metering system. The model numbers refer to the number of heavy-duty pigtail tines used to form the seed coulters. In both cases,the coulters are arranged in four rows to ensure there is enough trash clearance for minimum tillage seedbeds.

Behind the coulter tines is a single row of rearward angled covering tines,which are separately adjustable for working depth and angle. They leave a level finish for the tyre packer that follows and which also regulates the sowing depth of the drill. Finally, a single row of harrow tines leaves the surface with a weatherproof finish.

Typical power requirement for the 3m Seedline is 75 kW. As shown, its retail price is £9800.

CONTACT

Nick Ewbank, Lynx Engineering, Wharf Works, Long Buckby, Northampton, England, NN6 7PP Tel: 01327 843215. Fax: 01327 844341.

MANUFACTURING

Full-frame tractor reaches quarter million milestone

Finnish farmer Markku Voutilainen is the 250,000th customer to buy a John Deere full-frame tractor. The milestone has been reached in the Mannheim factory's 10th year of production of the 6000 Series tractor and its successors, the 6010 and 6020 Series.

The owner of a 185 ha family dairy and beef farm with an additional 100 ha of forest in Eastern Finland, Markku Voutilainen recently visited the factory to receive the keys to his new 90 kW 6420S tractor (pictured). This particular model was chosen for its versatility, lightweight and manoeuvrability, and for the performance of its innovative PowerTech engine, matched with the flexible AutoQuad II transmission.

This standard package offers application tailored engine power, with full electronic governing. The 6420S can produce up to 90 kW in draught or ploughing mode, with a further 3 kW being generated in power mode for pto and fast transport applications, as required.

John Deere's 200,000th full frame tractor, a 105 kW 6910 model, was produced in April 2001.

TRACTORS

AGCO increases commitment to European specialist tractor market

• Development of the next generation of Massey Ferguson Crawler Tractors well advanced
• Developments complement the highly successful Massey Ferguson 3300 Specialist tractor range launched in November 2000
• Massey Ferguson 2200 specialist tractor range enhanced with more power and torque derived from Perkins 41, 51 and 60 kW engines
• New range of MF 1300 agricultural compact tractors being developed
• Massey Ferguson 3200 High Clearance tractor range for vegetable and tobacco production

AGCO is demonstrating an increasing commitment to the specialist tractor market with a steady succession of new Massey Ferguson specialist tractor launches and more are on the horizon.

The process first began in 2000 with the launch of the 60-68 kW, MF 3200 High Clearance tractor range and the highly successful 41-71 kW MF 3300 Vineyard, Specialist and Fruit tractor range. The MF 3300 has rapidly gained sales success throughout Europe. Twenty-eight models and a huge range of specifications reflect the diversity of applications - from vineyard, orchard and nursery environments through to local councils, forestry and mining operations.

AGCO has now turned its attention to other tractors in the specialist field.

Plans are now in place to launch a new generation of MF Crawler tractors and also a new range of low horsepower agricultural compact tractors. In addition the Company also recently launched enhancements to the MF 2200 Utility tractor range.

New Massey Ferguson Crawler range

Plans are well advanced for the launch of a new Massey Ferguson Crawler tractor range later in 2002. The new range will include two new machines for vineyard and orchard applications and 3 machines for heavy draught open-field work.

The latest emissions compliant Perkins 60 and 68 kW engines will power the vineyard and orchard Massey Ferguson Crawlers. They have been specified to develop high torque and power and will offer an ideal power to weight ratio for vineyard and fruit applications especially in precipitous and difficult terrain. They will be fitted with low profile sheet metal and folding, two post, Roll Over Protection System (ROPS) allowing work in close proximity to valuable crops.

The Massey Ferguson Crawlers, designed for heavy draught open-field work, will be powered by the same engines as their vineyard and fruit cousins, plus a Perkins 71 kW engine for the larger machine. These will be heavier machines designed specifically for heavy draught open-field work and fitted with a rigid ROPS frame and vertical, side mounted exhaust offering excellent visibility.

Both Crawler ranges will be highly specified to suit specialist applications. They will of course use the Massey Ferguson track specification, long adopted as a standard by the industry. The latest Massey Ferguson Crawler range will also offer modern instrumentation, precise fingertip controls and an exceptionally comfortable and safe operator environment.

Charles Smith, AGCO's General Product Marketing Manager said: "Massey Ferguson has always had an excellent reputation for crawler tractors. We have always regarded the existing range of MF Crawlers as the best in their class. We thought long and hard about how we would replace them and now we can confirm that we are well advanced in the development of a range of new generation MF Crawlers of which we can be proud."

Massey Ferguson 2200 enhancements - more power and torque

AGCO has announced enhancements to its Massey Ferguson 2200 range of utility tractors, designed for specialist users who demand very cost effective and versatile solutions.

The extended range now consists of the MF 2210, MF 2225 and MF 2235 models which are fitted with Perkins emissions compliant 3 or 4 cylinder engines developing 41, 51 and 60 kW respectively.

The tractors are compact and light, achieving an excellent power to weight ratio and are therefore ideal for tasks such as seedbed preparation, drilling, tedding and mowing, nursery work, vegetable harvesting, orchard work, tree management, groundscare roadside management, golf course and amenity maintenance and general transport duties.

All models are available in 2 and 4 wheel drive versions with 12 x 12, 30 km/h and 15 x 15, 40 km/h transmissions. A special ground-hugging 'GE' version is especially suitable for work on precipitous slopes, where its excellent stability affords the operator great comfort and security. A 60 degree steering angle gives outstanding manoeuvrability whilst the optional Electronic Linkage control ensures increased accuracy and ease of operation. A high specification low noise cab with optional air conditioning is available as an alternative to the flat floor platform, completing the package that will ensure that long periods of work are completed in absolute comfort. The wide choice of options, including wheels and tyres, ensures that every customer can 'tailor make' a MF 2200 series specifically for his own application - no matter how diverse it may be.

New Agricultural Compact Tractor range - MF 1300

AGCO has yet to release complete details of its new Agricultural Compact range of tractors. The new machines will fit seamlessly within the Massey Ferguson Specialist tractor range, reflecting the Company's determination to provide a solution for any specialist application need.

There will be 3 models - 20, 26 and 32 kW, each designed

specifically for the rigours of agricultural applications on small to medium holdings including primary cultivation, seedbed preparation, drilling and transport applications. The MF 1300 range will be very well specified for small horsepower machines and will be equipped as standard with a 12 x 12 shuttle transmission, 4 wheel drive, 2 spool valves, position and draft control, and an extremely comfortable operator environment. Front linkage and power take-off (pto) will be available as an option. More information will be released soon.

MF 3200 High Clearance tractors

MF 3200 High Clearance tractors are equipped with 60 and 68 kW Perkins engines with high power and torque characteristics. They are available in 2 and 4-wheel drive, the 4-wheel drive version having equal diameter wheels for excellent traction and stability. A specially designed 55-degree front axle provides surprisingly agile manoeuvrability for this wheel and tyre configuration. They offer up to an impressive 650 mm ground clearance, ideal for vegetable and tobacco production. The MF 3200 is equipped with a modern transmission and an excellent operator environment, bringing latest tractor standards to a highly specialist tractor range.

Charles Smith commented: "The launch of our new generation Massey Ferguson Crawler range later this year, the enhancement of the MF 2200 tractor range and the development of the MF 1300 Agricultural Compact tractor range demonstrates AGCO's commitment to a growing share of Europe's specialist tractor market."

AGCO Corporation, headquartered in Duluth, Georgia, is a global designer, manufacturer and distributor of agricultural equipment and related replacement parts. AGCO products are distributed in 140 countries. AGCO offers a full product line including tractors, combines, hay tools, sprayers, forage equipment and implements through more than 7,750 independent dealers and distributors around the world.

CONTACT

Paul Lay, AGCO Ltd, P.O. Box 62, Banner Lane, Coventry, England, CV4 9GF. Tel: 02476 851209 E-mail: paullayuk.agcocorp.com Website: www.aqcocorp.com and www.massevferguson.com

MAIZE DRILLING

Accord's close row drilling technique improves yield and energy potential from forage maize

The Kvemeland Group is taking maize drilling technology one step further with the development of a close row planting technique that can increase yield and energy potential with forage maize when using the Accord Optima drill.

Key to the system is in the development of a diamond seed spacing pattern between adjacent rows of plants. By staggering the plants in adjacent rows, row widths can be reduced to 37.5 cm while still providing an exceptional amount of room for each plant to develop.

"By using seeding discs with fewer holes and synchronising the seed drop, we can accurately place maize seeds along each row and also precisely control their position in relation to adjacent rows," explains Kverneland sales director George Randles. "And with the Optima drill's modular construction, and use of depth wheels ahead of the toolbar frame, we can vary row widths accordingly."

Mr Randles says that staggering seeds in alternate rows means each plant gets more room to grow, but at existing 75 cm row widths, the plants get far too much space, so halving the row width becomes feasible.

"Results from trials carried out in Germany have found that with this new diamond seed spacing pattem, each plant can achieve better photosynthesis rates, which promotes earlier ripening, and better energy potential," says Mr Randles.

"Typically, we have found that the crop offers a yield increase of between 5 and 10% when compared to conventionally sown crops using the same seed rate, while net energy levels (NEL) have increased from 113.708 MJ NEL/ha to 119.393 MJ NEL/ha," he says.

"With more and more growers using Kemper type maize headers, we are no longer restrained to specific and traditional row widths to suit harvesting machinery," adds Mr Randles. "As a result, Accord has been able to improve crop husbandry techniques with close row drilling, but without altering existing seed rates."

At the University of Fritzlar, Germany, trials revealed that close row drilling also promotes earlier closing of the crop canopy, resulting in better weed control and reduced soil erosion. At harvest, fresh matter yields were 42.3 t/ha for standard drilling and 46.9 t/ha for close row drilling - an improvement of 10.7% - while dry matter yields were 14.2 t/ha and 15.7 t/ha, respectively.

The additional yield also justifies the cost of adding the extra seeding units to the drill, to convert to the close-row format. The company says that such costs can be recovered on only 14.1 ha of forage maize grown over an eight-year period.

"Existing Optima customers can buy additional seeding modules for use on their drills," he says. "Then they can unlock the potential of close row maize drilling, with row widths as narrow as 37.5 cm."

CONTACT

George Randles at Kverneland Group UK Ltd, Walkers Lane, Lea Green, St. Helens, Merseyside, WA9 4AF. Tel: +44 (0) 1744 853200. Fax: +44 (0) 1744 853400. Email: info-uksales@kverneland.com. Website: www.kvernelandgroup.com

DRILLS

New low-cost air drill from Sulky

Reco has expanded the range of Sulky pneumatic drills with the addition of the MP3 model which provides individual coulter metering,as found on other Sulky drills, at a lower cost than existing machines.

The MP3 is a compact, heavy-duty model with an adjustable parallel linkage which keeps the hopper closely coupled to the rear of the tractor, while allowing the coulter beam positions to be adjusted to suit the implement on which the drill is mounted.

As well as ensuring very precise seed placement, the design of the metering system also leaves the 750 litre hopper clear of obstructions, which ensures it empties completely and also makes it easy to fill. The system handles small or large seeds gently through pegwheels to the coulters in order to minimise damage. A hopper extension is available to increase capacity to 1000 litres.

The Sulky MP3 air drill provides individual coulter metering

Conventional Suffolk or special Sulky Unidisc coulters can be fitted,the latter being recommended for opening up furrows in 'trashy'soils. Electric or electronic tramlining systems are available and rear harrows, adjustable for angle and pressure, can be fitted with straight or levelling tines.

CONTACT

Rustons Engineering Co Ltd, Brampton Road, Huntingdon, Cambridgeshire, PE18 6BQ. Tel: 01480 455151 Fax: 01480 52116 E-mail: sales@reco.co.uk

MOWERS

Extension of mower range - flail mowers now available

The Teagle Topper Rotary and Roller Mower range is now being extended by the addition of the well established Berti range of flail mowers and mulchers.

Promotion of the flail machines under the Teagle umbrella will give customers a choice of flail or rotary mowers over the full working range of one metre through to three metres.

The flail units broadly fall into the categories of 'flail mowers' and 'flail mulchers'. Flail mowers are designed for use primarily on fresh vegetation and incorporate an easy exit path for the cut material. The flail mulcher range is designed to retain cut material within the rotor area until it is reduced to suitably small dimensions to escape. Retractable rake bars located immediately in front of the roller carry out this retention.

The new flail range is generously specified. Where a sideshift is available, it is hydraulically operated for example and all machines incorporate an overrun clutch in the driveline. The detailed construction is well thought out and the general design policy has been to adopt good engineering practice throughout.

Teagle Topper Rotary and Roller Mower range is being extended

The range is very extensive and there is a machine available to suit every customer's requirements. Mowers are fitted with chisel type blades as standard, but optional 'Y' type blades are available. Retail prices start at £2191 depending upon the model and size.

CONTACT

Teagle UK Sales Office, Teagle Machinery Limited, Blackwater, Truro, Cornwall, TR4 8HQ. Tel: 01 872 560592 Fax: 01 872 561166 E-mail: sales@teagie.co.uk.

BALERS

New wrapping baler for one-man silaging


New wrapping baler from John Deere promotes one-man sila ge operation

John Deere unveiled a new wrapping baler at its European product launch in Seville, Spain. Designed for one-man silage operation,the 678 TTSystem wrapping baler will be available in full production for the 2003 season.

The wrapper forms an integral part of this trailed machine, which requires a minimum of 75 kW at the tractor power take-off (pto). A tandem axle provides lower ground pressure and compaction, as well as allowing faster speeds in the field and on the road, up to 40 km/h.

Based on John Deere's established fixed chamber technology, the baler forms tight, very dense bales ideally suited to wrapping with net or stretchwrap. A. 2 m wide pickup and precutter with spring protected knives and mechanical reverser delivers the crop to the same high density bale forming chamber used on the new model 578 baler. Bale width is 1.17 m, and bale diameter can be adjusted from 1.25 to 1.35 m.

As on the new round baler range, hydraulic bale tensioning and infinitely adjustable chamber pressure are designed to ensure optimum bale density and quality in all crops and conditions.

When the bale reaches full size, the tractor driver is warned and tying or wrapping starts automatically after the bale is lifted onto the Table Transport System. In operation, the transport table extends to meet the bale when the chamber opens; two rolls with four wide, flexible belts and four guide rolls secure the bale during the twin arm wrapping process.

After wrapping is complete, the transport table pivots to ground level and gently lays the bale down. Bales can be grouped at one location to make handling easier, or to minimise rolling on hilly land.

The TTSystem design also uses less net and stretchwrap, due to the high bale density, and produces well shaped bales that are easy to handle and stack.

CONTACT

David Hart, John Deere Limited, Langar, Nottingham, NG13 9HT. Tel: 01949 860491 Fax: 01949 860490 Website: www.johndeere.co.uk

PUMPS

New hi-flow fuel transfer pump

Spaldings have introduced a new hi-flow 12/24 V fuel transfer pump into their range of Truecraft fuel transfer and handling equipment.

The new pump has been introduced to meet the needs of farmers and contractors with large high-horsepower machinery such as combines, self-propelled root & forage harvesters and large tractors.

Maximum pumping capacity of the new pump is 80 l/min, allowing a 600 l combine diesel tank to be filled in approximately 8 minutes,saving valuable time during harvest.

The new pump is totally portable for field use and can be powered by any 12 V or 24 V tractor or combine battery. Supplied with 4 m of electrical cable and heavy duty crocodile clips,3 m suction hose with filter and 3 m delivery hose with metal nozzle, the pump is priced at £199.00

CONTACT

Alastair Ramsay, Spaldings (UK) Limited, Sadler Road, Lincoln, LN6 3XJ. Tel: 01522 500600 722200 Fax: 01522 689011 E-mail: marketing@spaldings.co.uk Website: www.spaldings.co.uk

VEHICLE

Telehandler has great future behind it

New Holland has transformed the classical concept of an agricultural Telehandler with the development of a 'Dual Lift' version of its LM410,which it presented at Agritechnica 2001.

The company has equipped the LM410 with a rear-mounted three-point linkage, pto and trailer hitch, taking its versatility to completely new levels. "Now imagination is just about the only limit to what the LM410 is capable of doing on farm," says Product Specialist Pierre Lahutte.

New Holland has been at the forefront of the evolution of the Telehandler's role in the farm since it successfully launched the LM Series in 1998. The oversized torque converter and transmission are designed for traction and road speed performance. The LM Series Telehandlers can pull trailers or tankers and they are available from the factory with various trailer hook options.

It certainly gives the daily flexibility that users will appreciate

The rear engine design allows direct tipping in high-side trailers with minimal boom extension for quicker load cycles and greater productivity. The tractor-standard cab was designed for operator comfort.

Now, with the 'Dual Lift' version of the LM410 Telehandler, New Holland has gone one step further. For many light jobs done with HPL mounted and power take-off (pto) animated implements,the 106 hp LM410 has the capability of a conventional tractor of an equivalent horsepower.

"While the LM 'Dual Lift' could never be considered a true tractor – you wouldn't attempt to plough with it, for example – as a utility machine it certainly gives the daily flexibility that users will appreciate",says Mr Lahutte.

Within the new configuration, a hydraulic three-point linkage with a 2,500kg maximum lift capacity replaces the usual counterweight. An in-cab electro-hydraulic selector redirects the fourth boom service function to the linkage, which is then controlled by the same joystick that normally operates the boom. An additional rear hydraulic service valve can also be fitted to operate the implements fitted on the linkage. Implement attachment is quick and easy using external remote lift controls.

When reverting to telehandling mode, the lift arms can be folded up or removed altogether, so that the LM410 retains its excellent turning circle characteristic of a 3.4 m radius.

Full engine power is available via the 1,000 rpm pto, with a featherable electromagnetic clutch, rated to a maximum power of 200 kW and maximum torque of 1,200 Nm, ensuring smooth uptake of power to the implement.

"The rear-mounted engine arrangement of the LM Series has made these advances relatively straightforward, giving an inherently better balanced machine and allowing direct drive to the pto," states Mr Lahutte. "The 'Dual Lift' feature will be available in the first half of year 2002 on the LM410. If it is well received by customers, we will consider extending it to the 7 m reach LM430 models at a later stage."

"These latest changes are further proof of New Holland's commitment to designing Telehandlers specifically for agricultural businesses."

Technical Specifications of the LM410 'Dual Lift' Telehandler:

Max lift height: 6 m
Max.lift capacity: 2.8 t
Engine: 76 kW
Transmission: 4x4 Powershuttle
Power take-off: 1000 rpm (from engine crankshaft)
Rear HPL: 2.5 t (with remote controls and foldable lift arms)

CONTACT

John Hewett, New Holland.
Tel: 01268 292183 E-mail: John.Hewett@cnh.com

FENCING

Deer banned - for nibbling tops off trees

Dartmoor National Park rangers are taking a get tough policy with local fallow deer, which have been nibbling the tops off five thousand young trees. The trees were planted across a 3 hectare site, part of a major National Lottery project to fund conversion of an old 1950's plantation to moorland and woodland.

"Initially, sheep were thought to be the cause of the problem," explains Rupert Lane, Dartmoor National Park forestry officer. "After encasing the saplings in tree shelters we found that the tops protruding out of the shelters were still being nibbled away. It was obviously fallow deer which were to blame."

"We decided that the whole area needed fencing off. But there was a problem. The site was so rugged. It was impossible to get tractors into all areas with traditional metal fencing, so we opted for a special tough but lightweight deer fencing,Netlon® Deer Fence, which is made from polypropylene. We were easily able to move the rolls of fencing to where we needed them and fix them up to posts. The site is now secure and the trees should grow to their natural height - free from interference by fallow deer."

"In a few years,when the fencing has done its job at this site, we'll be able to take it down and re-use it to create smaller enclosures elsewhere. It's a very handy item."

Netlon® Deer Fence is a lightweight alternative to traditional wire. It is a black mesh (65 mm x 65 mm), 100% polypropylene, and comes in 50 m rolls which weigh 25kg. When fixed in place, it stands 1.9 m high. The fencing is supplied by Growing, Technologies Ltd.

CONTACT

Growing Technologies Ltd, 23 Willow Road, Trent Lane Industrial Estate, Castle Donington, Derbyshire DE74 2NP Tel: 01332 853888 Fax: 01332 853151 Website:www.growingtechnologies.co.uk E-mail:enquiries@growingtechnologies.co.uk

INSTITUTION OF **AGRICULTURAL ENGINEERS**